1. Question | 0607 Feb-March 2025 P2 V2 Q23

23 (a)

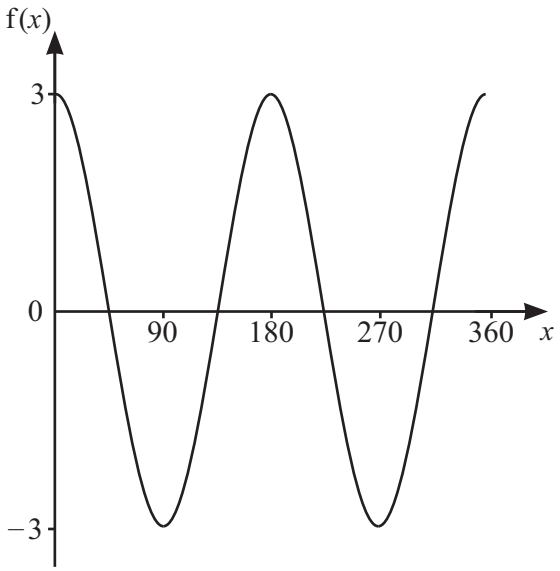

The diagram shows the graph of $f(x°) = a\cos bx$.

Find the value of a and the value of b.

$a =$ .....

$b =$ .....

[2]

(b) Solve $\dfrac{\sqrt{3}}{\tan x} - 1 = 0$ for values of x between 0° and 360°.

..... [3]

2. Question | 0607 May-June 2025 P2 V1 Q20

20 **(a)** Solve $\tan x = \sqrt{3}$ for values of x between 0° and 360°.

..... [2]

(b) This is a sketch of the graph of $y = \sin x$.

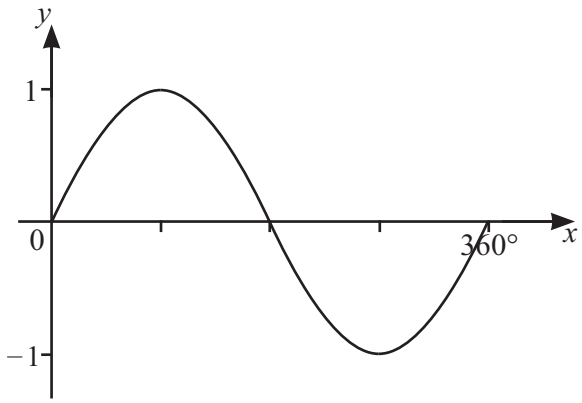

Solve $4\sin x + 3 = 1$ for values of x between 0° and 360°.

..... [3]

3. Question | 0607 May-June 2025 P2 V2 Q13

13

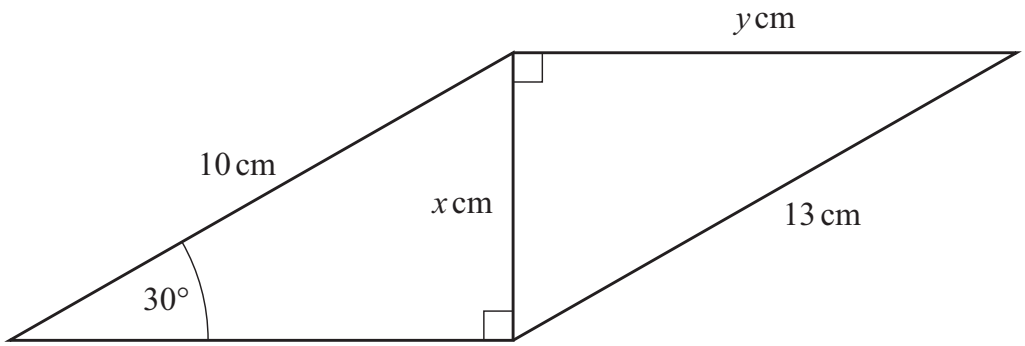

NOT TO SCALE

(a) Show that $x = 5$.

[2]

(b) Find the value of y.

$y =$ ..... [3]

4. Question | 0607 May-June 2025 P2 V3 Q14

14 $\mathrm{f}(x) = \cos x, \quad 0° \leqslant x \leqslant 360°$

(a) Write down the exact value of

(i) $\mathrm{f}(0)$

..... [1]

(ii) $\mathrm{f}(30)$.

..... [1]

(b)



On the diagram, sketch the graph of $y = \mathrm{f}(x)$ for $0° \leqslant x \leqslant 360°$. [2]

(c) Write down the amplitude of $\mathrm{f}(x)$.

..... [1]

5. Question | 0607 May-June 2025 P2 V3 Q21

21

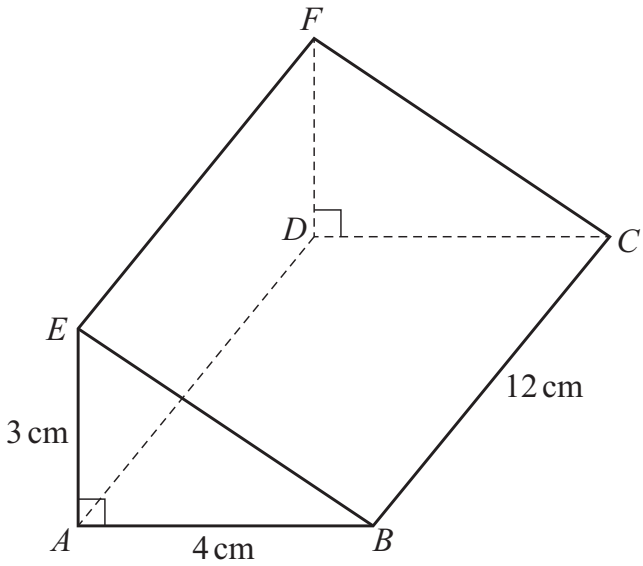

NOT TO SCALE

The diagram shows a triangular prism.
The cross-section is a right-angled triangle EAB.
$AE = 3$ cm, $AB = 4$ cm and $BC = 12$ cm.

(a) Work out the length of BF.

$BF =$ ..... cm [3]

(b) Find the sine of the angle between BF and the base $ABCD$.

..... [1]

6. Question | 0607 Oct-Nov 2025 P2 V1 Q12

12

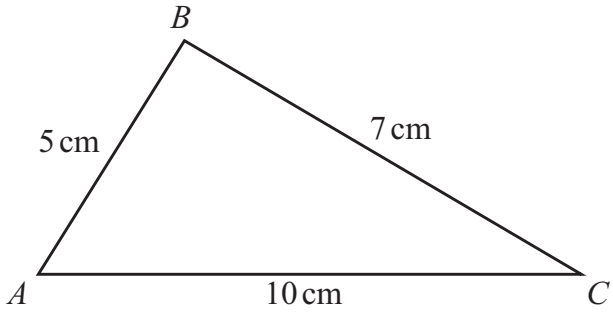

NOT TO SCALE

In triangle ABC, $AB = 5$ cm, $BC = 7$ cm and $AC = 10$ cm.

Show by calculation that angle ABC is obtuse.

[3]

16 **(a)** Show that the interior angle of a regular hexagon is 120°.

[1]

(b)

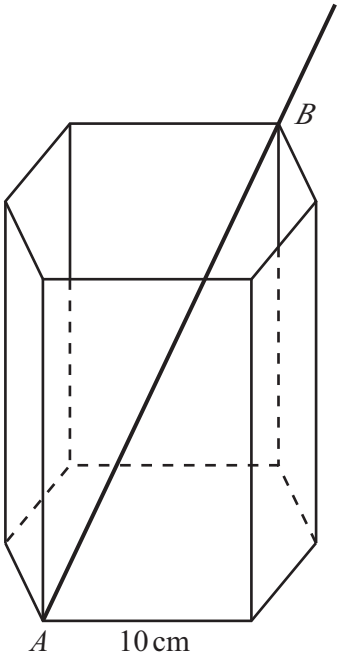

NOT TO SCALE

The diagram shows a container in the shape of a prism.
The cross-section of the prism is a regular hexagon with side length 10 cm.
The height of the prism is 15 cm.

A stick has one end at A and rests against B.
The stick makes an angle of x with the base.

Find $\tan x$.

$\tan x =$ ..... [4]

8. Question | 0607 Oct-Nov 2025 P2 V2 Q8

8 A right-angled triangle has sides 6 cm, 12 cm and x cm.

Find the possible values of x.
Give your answers in simplest surd form.

..... [4]

9. Question | 0607 Oct-Nov 2025 P2 V2 Q17

17 Write the list of numbers in order, starting with the smallest.

$\cos 60°$ $\quad \frac{\pi}{2} \quad$ $\tan 45°$ $\quad \sqrt{0.81}$

..... < ..... < ..... < ..... [2]
smallest

21

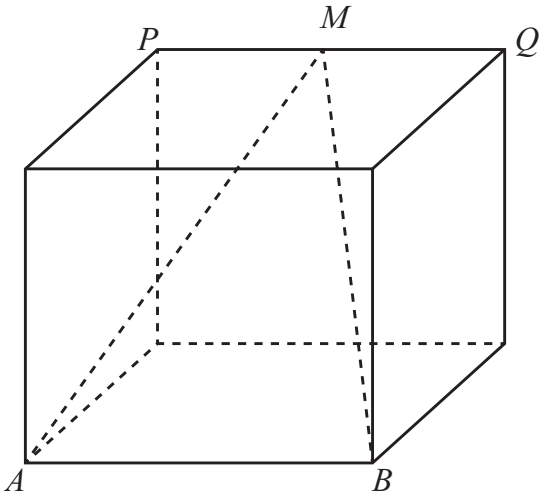

NOT TO SCALE

The diagram shows a cube of side length $2x$.
M is the midpoint of PQ.
The perimeter of triangle $AMB = kx$.

Find the value of k.

$k =$ ..... [4]

11. Question | 0607 Specimen 2025 P2 Q22

22 x is an acute angle and $\cos x = \frac{\sqrt{3}}{2}$.

Find the value of

(a) $\sin x$

..... [2]

(b) $\cos(180° + x)$.

..... [1]

12. Question | 0607 Feb-March 2026 P2 V2 Q17

17 The diagram shows triangle ABC.

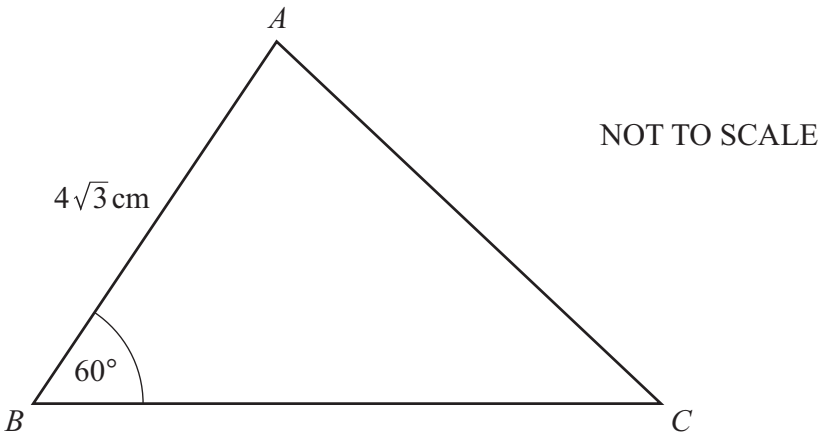

The area of triangle ABC is $30\,\text{cm}^2$.

Find the length of BC.

$BC =$ ..... cm [3]

13. Question | 0607 May-June 2026 P2 V1 Q22

22 $f(w) = \frac{1}{\cos w} + 2$ for values of w between 0° and 360°, $w \neq 90°$ and $w \neq 270°$.

Solve $f(w) = 0$.

..... [3]

Question 23 is on the back page.

14. Question | 0607 May-June 2026 P2 V2 Q15

15 Write down the exact value of

(a) cos 30°

..... [1]

(b) cos 330°.

..... [1]

15. Question part 1/2 | 0607 May-June 2026 P2 V3 Q17

17 **(a)** ABC is a triangle with angle $ABC = 90°$.

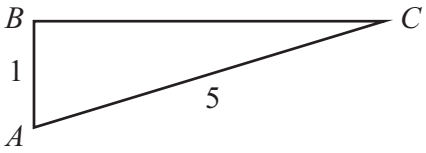

NOT TO SCALE

It is given that $\cos A = \frac{1}{5}$.

Show that $\sin A = \frac{\sqrt{24}}{5}$.

[2]

(b) The diagram shows triangle PQR.

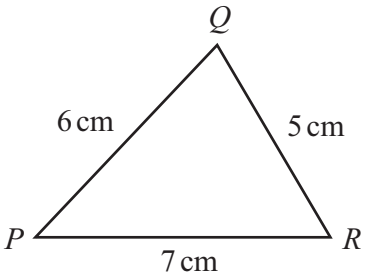

NOT TO SCALE

(i) Show that $\cos Q = \frac{1}{5}$.

[2]

15. Question part 2/2 | 0607 May-June 2026 P2 V3 Q17

(ii) Use the results in **17(a)** and **17(b)(i)** to find the exact value of the area of triangle PQR. Give your answer in the form $k\sqrt{k}$, where k is an integer.

..... cm^2 [3]