1. Question | 0607 Feb-March 2025 P4 V2 Q17

17 Simplify.

$$\left(64a^6b^{-3}\right)^{\frac{2}{3}}$$

..... [3]

2. Question | 0607 Feb-March 2025 P4 V2 Q18

18 $\dfrac{10}{2x-5} - \dfrac{6}{x+1} = 1$

(a) Show that $2x^2 - x - 45 = 0$.

[4]

(b) Solve by factorising.

$2x^2 - x - 45 = 0$

$x =$ ..... or $x =$ ..... [3]

3. Question | 0607 May-June 2025 P4 V1 Q3

3 **(a)** Expand.

$$x^2(3x-2)$$

..... [1]

(b) Expand and simplify.

$$2(3x-2)-5(1-4x)$$

..... [2]

4. Question | 0607 May-June 2025 P4 V1 Q5

5 $s = \frac{u+v}{2} \times t$

Find s when $u = 4.3$, $v = 9.5$ and $t = 8.5$.

$s =$ ..... [1]

5. Question | 0607 May-June 2025 P4 V1 Q7

7 Simplify.

$$2x^3y^4 \times (4x^2y)^3$$

..... [3]

6. Question | 0607 May-June 2025 P4 V1 Q13

13 Pierre drives from town P to town Q and then to town R.
The distance from P to Q is 112 km.
The distance from Q to R is 87 km.

The average speed from P to Q is x km/h.
The average speed from Q to R is $(x+10)$ km/h.
The total time for the journey from P to Q to R is 3 hours.

(a) Show that $3x^2 - 169x - 1120 = 0$.

[4]

(b) **(i)** Solve $3x^2 - 169x - 1120 = 0$.
You must show your working.

$x =$ ..... or $x =$ ..... [3]

(ii) Find the average speed from Q to R.

..... km/h [1]

7. Question | 0607 May-June 2025 P4 V2 Q2

2 Solve.

(a) $4x - 3 = 15$

$x =$ ..... [2]

(b) $1 - 2x = 11 - 4x$

$x =$ ..... [2]

8. Question | 0607 May-June 2025 P4 V2 Q6

6 $A = \frac{1}{2}(x+y)h$

(a) Find the value of A when $x = 7$, $y = 12.5$ and $h = 6$.

$A =$ ..... [1]

(b) Rearrange the formula to write x in terms of A, y and h.

$x =$ ..... [2]

9. Question | 0607 May-June 2025 P4 V2 Q7

7

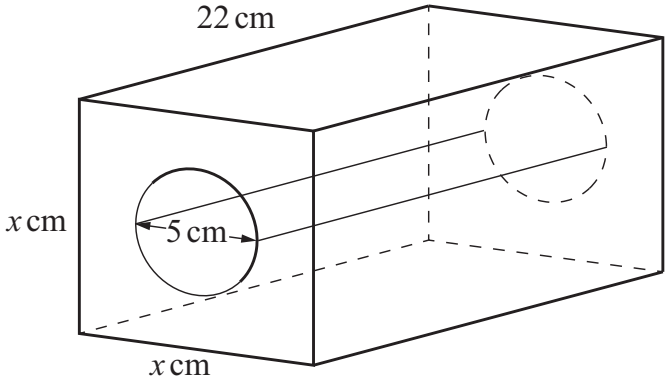

NOT TO SCALE

The diagram shows a wooden cuboid with a cylinder removed.
The cuboid has length 22 cm, width x cm and height x cm.
The cylinder has length 22 cm and diameter 5 cm.

The volume of wood remaining after the cylinder has been removed is 976 cm^3.

Find the value of x.

$x =$ ..... [3]

10. Question | 0607 May-June 2025 P4 V2 Q13

13 Use a graphical method to solve

$$5 \times 0.8^x = 2x + 7.$$

Give your answer correct to 2 decimal places.

$x =$ ..... [3]

11. Question | 0607 May-June 2025 P4 V2 Q14

14 y varies inversely as the square root of $(x-1)$.
$y = 1$ when $x = 5$.

(a) Find y in terms of x.

$y =$ ..... [2]

(b) w varies directly as y^2.
$w = 45$ when $y = 3$.

Use your answer to **part (a)** to find w in terms of x.
Give your answer in the form $w = p(x-1)^q$, where p and q are constants.

$w =$ ..... [4]

12. Question | 0607 May-June 2025 P4 V3 Q5

5 Solve.

$$0 = 4x - 11$$

$x =$ ..... [1]

13. Question | 0607 May-June 2025 P4 V3 Q12

12 $w \propto \sqrt{x+1}$
When $x = 3$, $w = 8$.

Find x when $w = 20$.

$x =$ ..... [3]

14. Question | 0607 May-June 2025 P4 V3 Q14

14 Priya buys pieces of fruit.
The pieces of fruit are apples and oranges.

The price of 1 apple is x cents.
The price of 1 orange is $(x+10)$ cents.

Priya spends 420 cents on apples.

(a) Write down an expression, in terms of x, for the number of apples she buys.

..... [1]

(b) Priya also spends 420 cents on oranges.
She buys 13 pieces of fruit.

(i) Show that $13x^2 - 710x - 4200 = 0$.

[3]

(ii) Factorise $13x^2 - 710x - 4200$.

..... [2]

(iii) Find the cost of one orange.

..... cents [2]

15. Question | 0607 May-June 2025 P4 V3 Q20

20 Simplify.

$$\frac{3x-5}{3xy-3x-5y+5}$$

..... [3]

16. Question | 0607 Oct-Nov 2025 P4 V1 Q5

5 Solve.

$$5-2x > 3x+7$$

..... [2]

17. Question | 0607 Oct-Nov 2025 P4 V1 Q10

10 y is inversely proportional to x^3.
When $x = 2$, $y = 2.5$.

(a) Find y in terms of x.

$y =$ ..... [2]

(b) Find the value of x when $y = 20\,000$.

$x =$ ..... [2]

(c) p is directly proportional to y^2.
When $x = \sqrt[3]{2}$, $p = 1200$.

Find p in terms of x.

$p =$ ..... [3]

18. Question | 0607 Oct-Nov 2025 P4 V2 Q3

3 Simplify.

$$3x - 4y + x - 5y$$

..... [2]

19. Question | 0607 Oct-Nov 2025 P4 V2 Q7

7 Factorise.

$$3ax + 4by - 3ay - 4bx$$

..... [2]

20. Question | 0607 Oct-Nov 2025 P4 V2 Q12

12 Solve.

$$\frac{2x-5}{3} - \frac{5}{6} = \frac{1-4x}{2}$$

$x =$ ..... [4]

21. Question | 0607 Oct-Nov 2025 P4 V2 Q13

13 Factorise.

$$3x(2x-y)^2 + 4(2x-y)^3$$

..... [3]

22. Question | 0607 Oct-Nov 2025 P4 V3 Q5

5 Solve the simultaneous equations.
You must show all your working.

$$3x - y = 1$$
$$5x + 2y = -24$$

$x =$ .....

$y =$ .....
[3]

23. Question | 0607 Oct-Nov 2025 P4 V3 Q11

11 $y = x^3 - a$

Rearrange the formula to make x the subject.

$x =$ ..... [2]

24. Question | 0607 Oct-Nov 2025 P4 V3 Q12

12 $y \propto \dfrac{1}{\sqrt{x+1}}$

When $x = 8$, $y = 5$.

Find y when $x = 24$.

$y =$ ..... [3]

25. Question | 0607 Oct-Nov 2025 P4 V3 Q16

16 Simplify.

$$\frac{1-2x}{ab-2abx+2x-1}$$

..... [3]

26. Question | 0607 Specimen 2025 P4 Q7

7 Solve the equation.

$$\frac{y-3}{7}=\frac{2y+1}{5}$$

$y =$ ..... [3]

27. Question | 0607 Specimen 2025 P4 Q8

8 Factorise.

(a) $xy + 2wx$

..... [1]

(b) $2px - x + 14p - 7$

..... [2]

28. Question | 0607 Specimen 2025 P4 Q11

11 Expand and simplify.

$$(x + 7y)(x - y)(x - 6y)$$

..... [3]

29. Question | 0607 Specimen 2025 P4 Q13

13 $2^{3x+1} = 8^{2-x}$

Find the value of x.

$x =$ ..... [3]

30. Question | 0607 Specimen 2025 P4 Q17

17 Use a graphical method to solve the inequality.
Show a sketch of the graph.

$2^x + x > 5$

..... [3]

31. Question | 0607 Feb-March 2026 P4 V2 Q2

2 Simplify.

$7a+3b-5a-6b$

..... [2]

32. Question | 0607 Feb-March 2026 P4 V2 Q3

3 $A = 3b - 2c$

Find b when $A = 5.4$ and $c = 1.2$.

$b =$ ..... [2]

33. Question | 0607 Feb-March 2026 P4 V2 Q5

5 **(a)** The nth term of a sequence is $n^2 + n$.

Find the first 3 terms of the sequence.

..... , ... , ... [2]

(b) These are the first 5 terms of a different sequence.

14 11 8 5 2

(i) Find the next term.

..... [1]

(ii) Find the nth term.

..... [2]

34. Question | 0607 Feb-March 2026 P4 V2 Q13

13 Solve the simultaneous equations.
You must show all your working.

$$\frac{1}{2}x + \frac{1}{3}y = 5$$
$$3x - 2y = 12$$

$x =$ .....

$y =$ .....

[3]

35. Question | 0607 Feb-March 2026 P4 V2 Q17

17 Expand and simplify.

$$(2x+3)(x-1)(x+5)$$

..... [3]

36. Question | 0607 May-June 2026 P4 V1 Q8

8 **(a)** These are the first 5 terms of a sequence.

17 17 15 11 5

Find the next two terms.

..... , ... [2]

(b) The nth term of a different sequence is $13n^2 - 5$.

Find the value of n when the nth term is 16 843.

$n =$ ..... [2]

(c) These are the first 5 terms of another sequence.

1 15 53 127 249

Find the nth term of this sequence.

..... [2]

37. Question | 0607 May-June 2026 P4 V1 Q10

10 Make t the subject of the formula $P = 9r^2 - 16t^2$.

$t =$ ..... [3]

38. Question | 0607 May-June 2026 P4 V1 Q12

12 Factorise $2xy - 2ay - bx + ab$.

..... [2]

39. Question | 0607 May-June 2026 P4 V1 Q16

16 p varies inversely as the cube of x.
$p = 2$ when $x = 2$.

(a) Find p in terms of x.

..... [2]

(b) r varies directly as the square root of p.
$r = 24$ when $p = 64$.

Find r in terms of x.
Give your answer in the form $r = ax^b$ where a and b are constants.

..... [4]

40. Question | 0607 May-June 2026 P4 V1 Q17

17 Use a graphical method to solve the inequality $x^2 + 3x - 6 > 0$.
Show a sketch of your graph.

..... [4]

41. Question | 0607 May-June 2026 P4 V2 Q2

2 Simplify.

$$3c - d + 4c - d$$

..... [2]

42. Question | 0607 May-June 2026 P4 V2 Q3

3 Simplify.

$$\frac{5x}{y} \times \frac{3}{p}$$

..... [1]

43. Question | 0607 May-June 2026 P4 V2 Q4

4 Factorise.

$$2p^2 - 8pt$$

..... [2]

44. Question | 0607 May-June 2026 P4 V2 Q9

9 Use the quadratic formula to solve $3p^2 - p - 3 = 0$.
Give your answers correct to 2 decimal places.
You must show all your working.

$p =$ ..... or $p =$ ..... [3]

45. Question | 0607 May-June 2026 P4 V2 Q10

10 $y \propto \frac{1}{x^3}$

When $x = 2$, $y = \frac{1}{4}$.

Find y in terms of x.

$y =$ ..... [2]

46. Question | 0607 May-June 2026 P4 V2 Q11

11 These are the first 5 terms of a sequence.

80 $\quad -40 \quad$ 20 $\quad -10 \quad$ 5

(a) Write down the next term.

..... [1]

(b) Find the nth term.

..... [2]

47. Question | 0607 May-June 2026 P4 V2 Q19

19 Simplify.

$$\frac{1-w^2}{1+wx-w-x}$$

..... [4]

48. Question | 0607 May-June 2026 P4 V3 Q2

2 Solve.

$$5x + 13 = 8$$

$x =$ ..... [2]

49. Question | 0607 May-June 2026 P4 V3 Q4

4 $X = c^2 - 9d^2$

(a) Find the value of X when $c = 10.4$ and $d = 3.2$.

..... [1]

(b) Rearrange the formula to write d in terms of X and c.

$d =$ ..... [3]

50. Question | 0607 May-June 2026 P4 V3 Q11

11 Expand and simplify $(x-3)(x+2)(2x-1)$.

..... [3]

51. Question | 0607 May-June 2026 P4 V3 Q13

13 Factorise $16x^2 - 9y^2$.

..... [2]

52. Question | 0607 May-June 2026 P4 V3 Q17

17 **(a)** Use a graphical method to solve the equation $2^x = 0.5x + 1.5$.
Show a sketch of your graph.

$x =$ ..... or $x =$ ..... [4]

(b) Solve the inequality $2^x > 0.5x + 1.5$.

..... [2]