1. Question | 0607 Feb-March 2025 P4 V2 Q1

1 This shape is made using 2 rectangles.

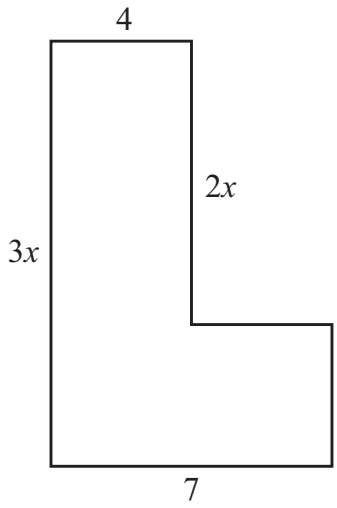

NOT TO SCALE

(a) Find the perimeter of the shape.
Give your answer, in terms of x, in its simplest form.

..... [2]

(b) Find the area of the shape.
Give your answer, in terms of x, in its simplest form.

..... [2]

2. Question | 0607 Feb-March 2025 P4 V2 Q15

15

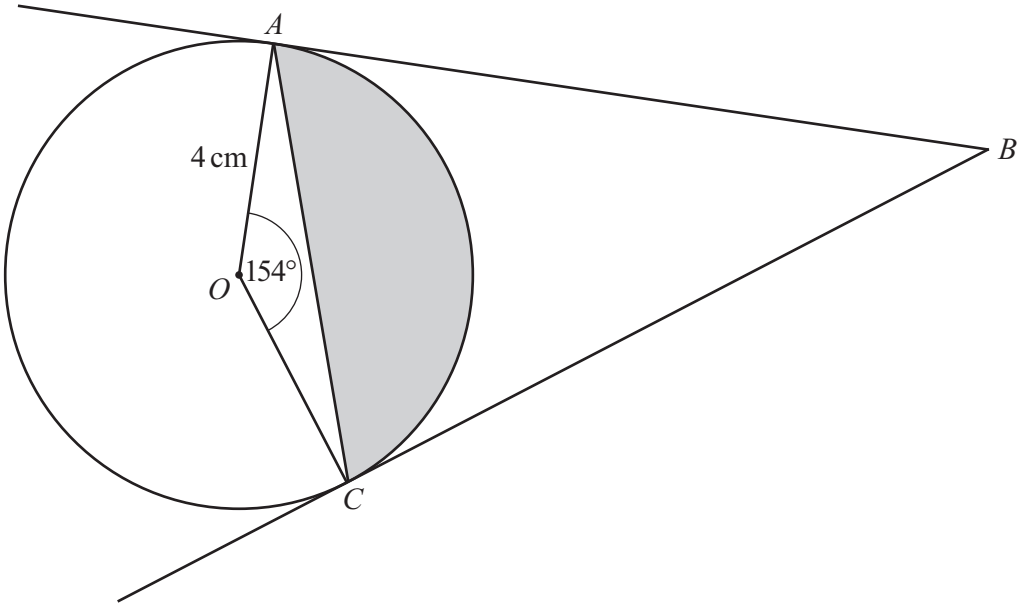

NOT TO SCALE

A and C are points on the circle, centre O.
BA and BC are tangents to the circle.
The radius of the circle is 4 cm.
Angle $AOC = 154°$.

(a) Write down the mathematical name of the quadrilateral $ABCO$.

..... [1]

(b) Calculate the area of the shaded segment.

..... cm^2 [3]

(c) Calculate the shortest distance from B to the circumference of the circle.

..... cm [3]

3. Question | 0607 May-June 2025 P4 V1 Q6

6

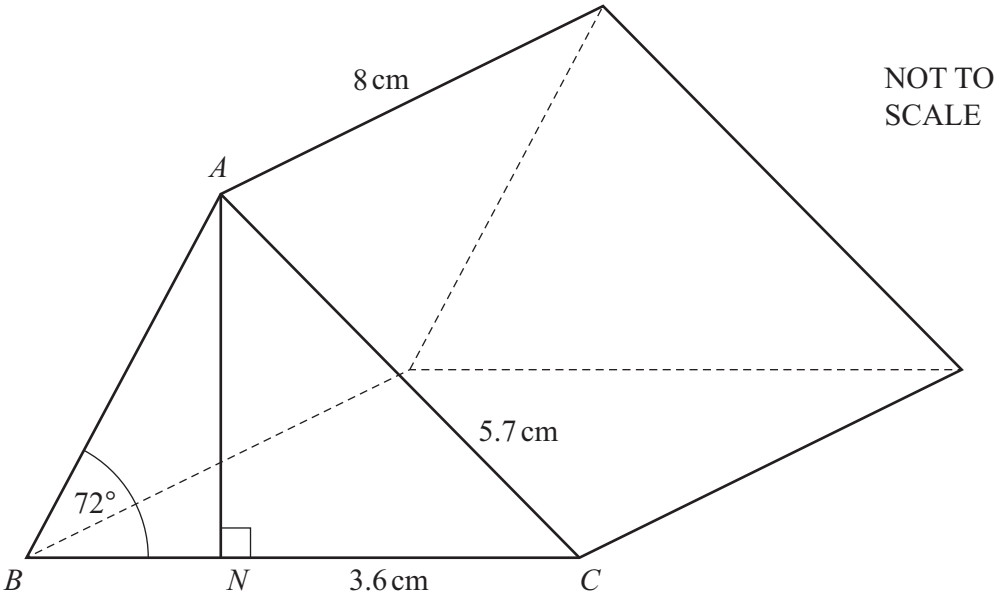

Triangle ABC is the cross-section of a prism.
$AC = 5.7$ cm, $NC = 3.6$ cm and the length of the prism is 8 cm.
Angle $ABN = 72°$ and angle $ANC = 90°$.

(a) AN is the perpendicular height of the triangle.

Show that $AN = 4.42$ cm correct to 3 significant figures.

[2]

(b) Calculate the volume of the prism.

..... cm^3 [5]

4. Question | 0607 May-June 2025 P4 V1 Q10

10

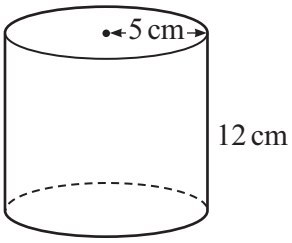

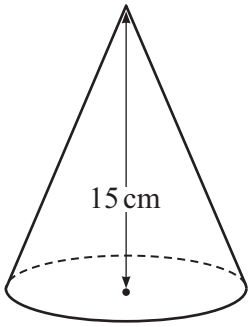

NOT TO SCALE

The diagram shows a solid cylinder and a solid cone.

The radius of the cylinder is 5 cm and its height is 12 cm.
The height of the cone is 15 cm.
The volume of the cylinder is equal to the volume of the cone.

(a) Show that the volume of the cylinder is $300\pi\,\text{cm}^3$.

[1]

(b) Find the total surface area of the cone.

..... cm^2 [5]

5. Question | 0607 May-June 2025 P4 V3 Q2

2 Convert 0.027 kilometres into centimetres.

..... cm [1]

6. Question | 0607 May-June 2025 P4 V3 Q9

9 The volume of a sphere is 96.5 cm^3.

Calculate the radius of the sphere.

..... cm [2]

7. Question | 0607 May-June 2025 P4 V3 Q13

13

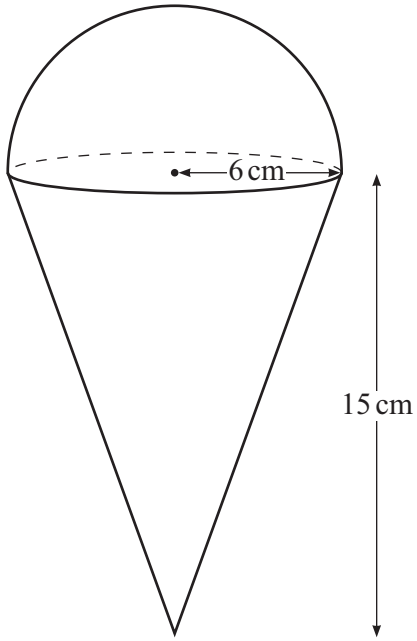

NOT TO SCALE

A solid is formed from a cone and a hemisphere.
The cone and the hemisphere each have a radius of 6 cm.
The cone has a height of 15 cm.

Find the volume of the solid.

..... cm^3 [3]

8. Question | 0607 Oct-Nov 2025 P4 V1 Q7

7

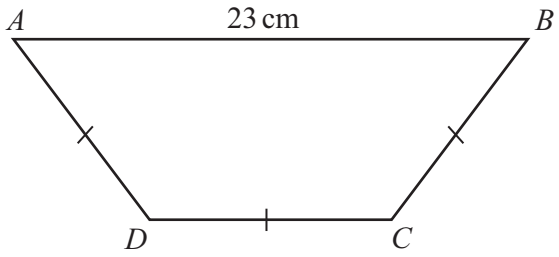

NOT TO SCALE

The diagram shows a trapezium, $ABCD$.
$AD = DC = CB$ and $AB = 23$ cm.
The perimeter of the trapezium is 62 cm.

(a) Calculate the area of the trapezium.

..... cm^2 [5]

(b) Calculate angle BAD.

Angle $BAD =$ ..... [2]

9. Question | 0607 Oct-Nov 2025 P4 V1 Q14

14

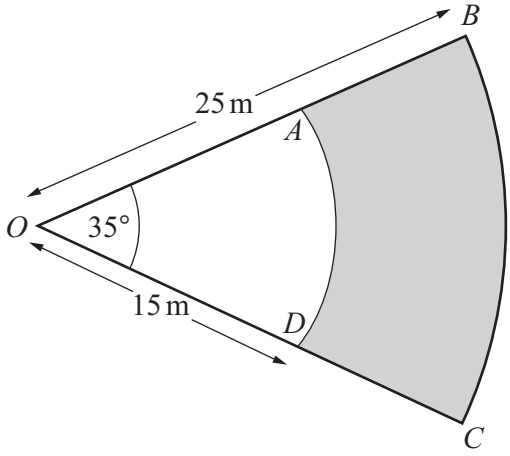

NOT TO SCALE

OAD and *OBC* are sectors of circles each with centre *O*.
The sector angle is 35°.
The radius of the smaller circle is 15 m.
The radius of the larger circle is 25 m.

(a) Calculate the area of the shaded region.

..... m^2 [3]

(b) Calculate the perimeter of the shaded region.

..... m [4]

10. Question | 0607 Oct-Nov 2025 P4 V2 Q5

5 Calculate the area of a circle which has a diameter of 6.4 cm.

..... cm^2 [2]

11. Question | 0607 Oct-Nov 2025 P4 V2 Q17

17 A solid cone has base radius r and vertical height $3r$.
The total surface area of the cone is $209.22\ \text{cm}^2$.

(a) Find r.

$r =$ ..... cm [4]

(b) A mathematically similar cone has a total surface area of $1882.98\ \text{cm}^2$.

Find the radius of this cone.

..... cm [3]

12. Question | 0607 Oct-Nov 2025 P4 V3 Q9

9

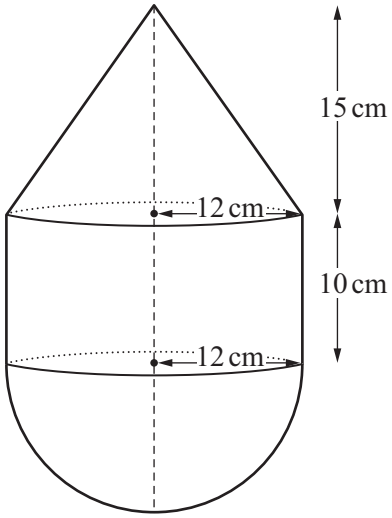

NOT TO SCALE

The diagram shows a solid made with a cone, a cylinder and a hemisphere.

The radius of each of the cone, the cylinder and the hemisphere is 12 cm.
The height of the cone is 15 cm.
The height of the cylinder is 10 cm.

Calculate the total surface area of the solid.

..... cm^2 [5]

13. Question | 0607 Oct-Nov 2025 P4 V3 Q10

10

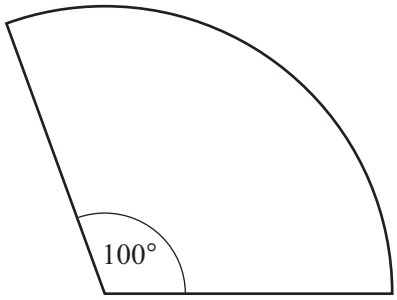

NOT TO SCALE

The diagram shows a sector of a circle.
The perimeter of the sector is 48.4 cm.

Calculate the area of the sector.

..... cm^2 [4]

14. Question | 0607 Specimen 2025 P4 Q9

9

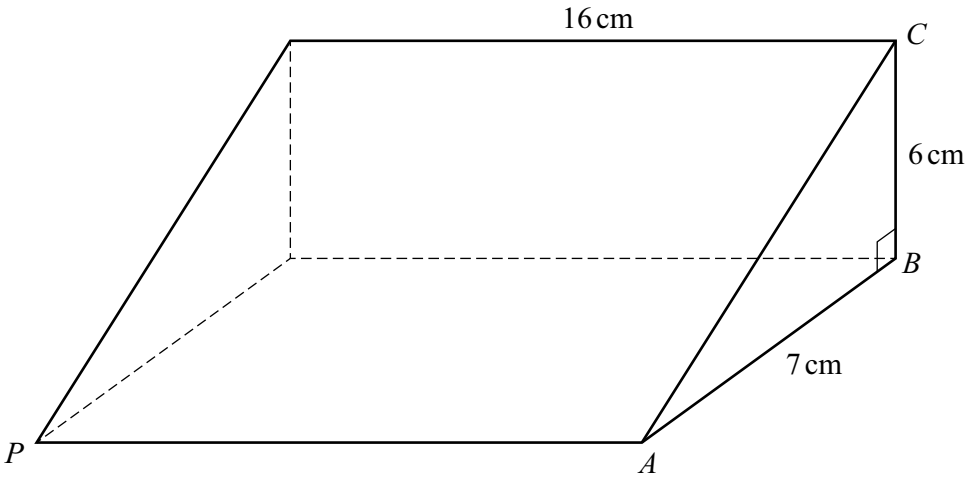

NOT TO SCALE

The diagram shows a prism of length 16 cm.
Triangle ABC is a cross-section of the prism with $AB = 7$ cm, $BC = 6$ cm and angle $ABC = 90°$.

(a) Calculate the area of triangle ABC.

..... cm^2 [1]

(b) Calculate the total surface area of the prism.

..... cm^2 [4]

(c) Calculate the length of PC.

..... cm [3]

15. Question | 0607 Feb-March 2026 P4 V2 Q11

11 The diagram shows a solid formed from a cylinder with a cone removed.

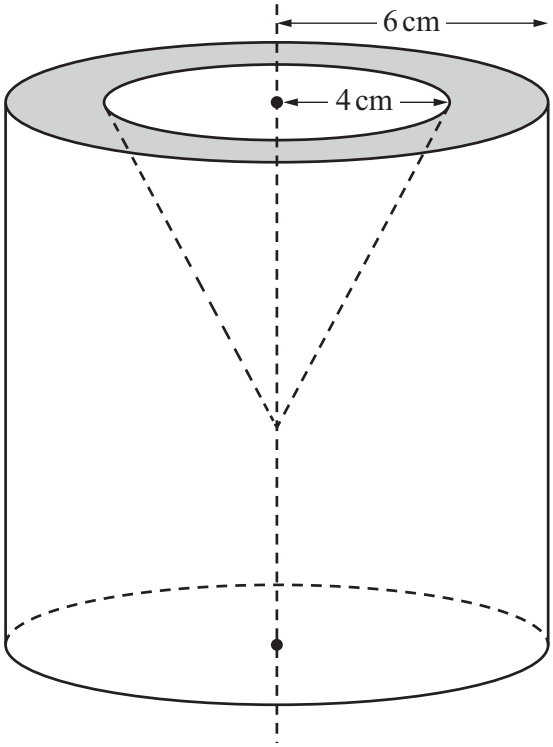

NOT TO SCALE

The cylinder has a radius of 6 cm and a height of 15 cm.
The cone has a radius of 4 cm and a height of 8 cm.

Calculate the total surface area of the solid.

..... cm^2 [6]

16. Question | 0607 May-June 2026 P4 V1 Q3

3 Change $4.7\,\text{m}^2$ into cm^2.

..... cm^2 [1]

17. Question | 0607 May-June 2026 P4 V1 Q14

14 The diagram shows a solid.

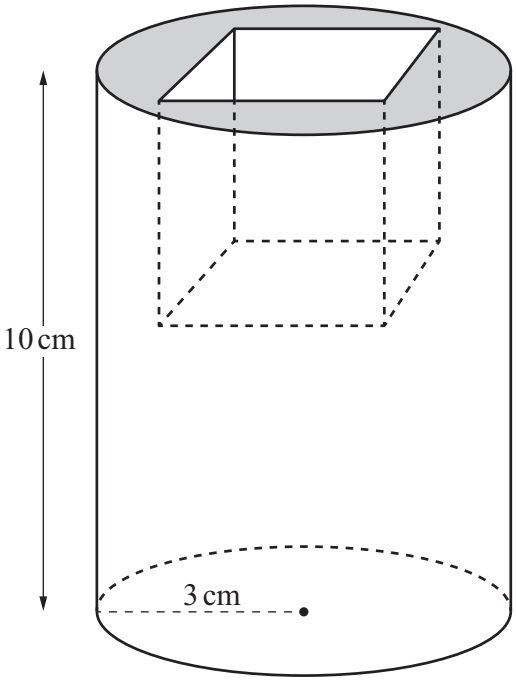

NOT TO SCALE

The solid is formed by removing a cube from the top of a solid cylinder.

The radius of the cylinder is 3 cm.
The height of the cylinder is 10 cm.

The cube has side length x cm.
The total surface area of the solid is 300 cm^2.

Find the value of x.

$x =$ ..... [5]

18. Question | 0607 May-June 2026 P4 V2 Q16

16 The diagram shows a sector of a circle.

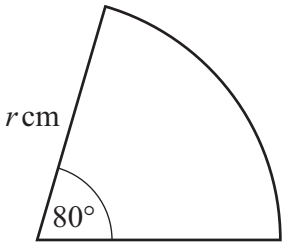

NOT TO SCALE

The area of the sector is $62.6\,\text{cm}^2$.

Calculate the value of r.

$r =$ ..... [3]

19. Question | 0607 May-June 2026 P4 V3 Q6

6 The volume of a cube is $729x^6$ cm^3.

Find an expression, in terms of x, for the total surface area of this cube.

..... cm^2 [3]

20. Question | 0607 May-June 2026 P4 V3 Q14

14

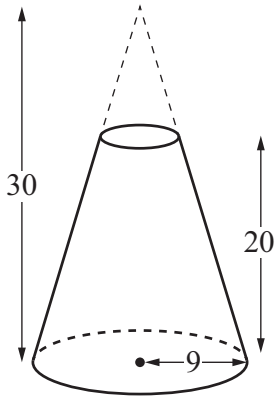

NOT TO SCALE

The diagram shows the frustum of a cone.
The frustum has a base radius of 9 cm and a vertical height of 20 cm.
The vertical height of the original cone is 30 cm.

(a) Calculate the volume of the frustum.

..... cm^3 [3]

(b) Calculate the surface area of the frustum.

..... cm^2 [5]