* 0000800000001 * DFD

CAMBRIDGE
International Education

Cambridge IGCSE™

CANDIDATE NAME

CENTRE NUMBER

CANDIDATE NUMBER

6128112385

CAMBRIDGE INTERNATIONAL MATHEMATICS **0607/61**

Paper 6 Investigation and Modelling (Extended) **May/June 2026**

1 hour 30 minutes

You must answer on the question paper.

No additional materials are needed.

INSTRUCTIONS

- Answer **all** questions.
- Use a black or dark blue pen. You may use an HB pencil for any diagrams or graphs.
- Write your name, centre number and candidate number in the boxes at the top of the page.
- Write your answer to each question in the space provided.
- Do **not** use an erasable pen. Do **not** use correction fluid or tape.
- Do **not** write on any bar codes.
- You should use a graphic display calculator where appropriate.
- You may use tracing paper.
- You must show all necessary working clearly, including sketches, to gain full marks for correct methods.
- In this paper you will be awarded marks for providing full reasons, examples and steps in your working to communicate your mathematics clearly and precisely.

INFORMATION

- The total mark for this paper is 50.
- The number of marks for each question or part question is shown in brackets [ ].

This document has **20** pages. Any blank pages are indicated.

DC (DE/SW) 360310/3
© Cambridge University Press & Assessment 2026

[Turn over

Section A

Investigation Frame sums

You are advised to spend no longer than 45 minutes on this section.

In this investigation you will look at calculations in a frame moving on a number grid.

The frame is made of 3 squares.
The frame moves on a number grid.

Consecutive whole numbers fill a grid of width 8.
The grid continues downwards.

1	2	3	4	5	6	7	8
9	10	11	12	13	14	15	16
17	18	19	20	21	22	23	24
25	26	27	28	29	30	31	32
33	34	35	36	37	38	39	40

To find the frame sum for any frame:

- square the number on the right
- multiply the two numbers on the left
- subtract the second answer from the first answer.

Example

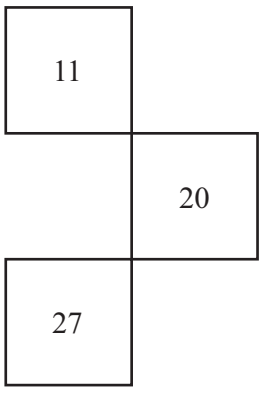

$20^2 = 400$

$11 \times 27 = 297$

$400 - 297 = 103$

frame sum $= 103$

DO NOT WRITE IN THIS MARGIN

1 **(a)** Use the grid to complete the frame and find the frame sum.

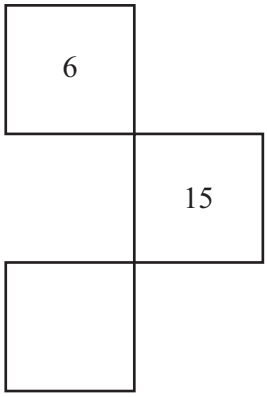

15^2 = ...

6 × ..... = ...

..... − ..... = ...

frame sum = ...

[2]

(b) Find the frame sum for this frame.

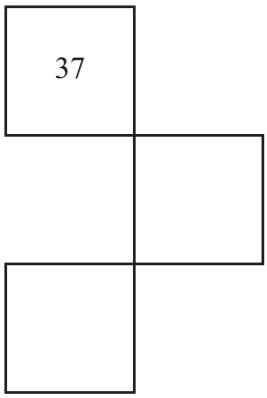

..... [2]

DO NOT WRITE IN THIS MARGIN
DO NOT WRITE IN THIS MARGIN
DO NOT WRITE IN THIS MARGIN
DO NOT WRITE IN THIS MARGIN
DO NOT WRITE IN THIS MARGIN

2 The diagram shows the frame on the same grid.
The number in the top square is n.

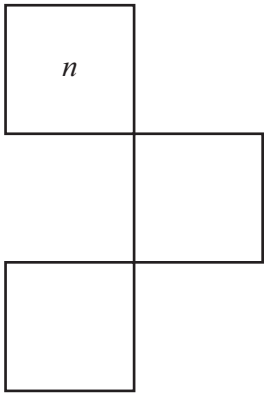

(a) Complete the other two squares with expressions in terms of n. [2]

(b) Use algebra to show that an expression for the frame sum is $2n + 81$.

[3]

(c) The frame sum is 197.

Find the number in the top square of the frame.

..... [2]

© Cambridge University Press & Assessment 2026

DO NOT WRITE IN THIS MARGIN
DO NOT WRITE IN THIS MARGIN
DO NOT WRITE IN THIS MARGIN
DO NOT WRITE IN THIS MARGIN
DO NOT WRITE IN THIS MARGIN

(d) The number in the bottom square of the frame is 223.

Find the frame sum.

..... [2]

DO NOT WRITE IN THIS MARGIN
DO NOT WRITE IN THIS MARGIN
DO NOT WRITE IN THIS MARGIN
DO NOT WRITE IN THIS MARGIN
DO NOT WRITE IN THIS MARGIN

3 The numbers in the grid now increase by a different amount.

In this grid:

- the numbers start at 11
- the numbers increase by 4
- the width of the grid is 7 squares
- the grid continues downwards.

11	15	19	23	27	31	35
39	43	47	51	55	59	63
67	71	75	79	83	87	91
95	99	103	107	111	115	119

(a) Find the frame sum for this frame.

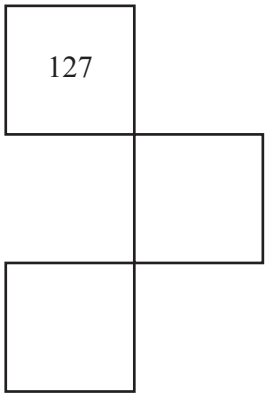

..... [2]

DO NOT WRITE IN THIS MARGIN
DO NOT WRITE IN THIS MARGIN
DO NOT WRITE IN THIS MARGIN
DO NOT WRITE IN THIS MARGIN
DO NOT WRITE IN THIS MARGIN

(b) The number in the top square is n.

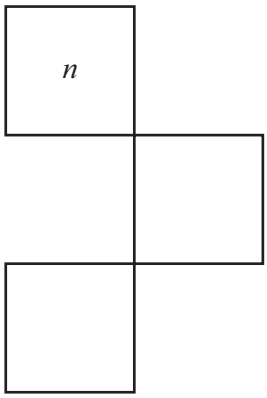

Find an expression for the frame sum.
Do not simplify your answer.

..... [3]

DO NOT WRITE IN THIS MARGIN
DO NOT WRITE IN THIS MARGIN
DO NOT WRITE IN THIS MARGIN
DO NOT WRITE IN THIS MARGIN
DO NOT WRITE IN THIS MARGIN

4 In another grid:

- the numbers increase by d
- the width of the grid is w squares
- the grid continues downwards.

(a) The number in the top square is n.

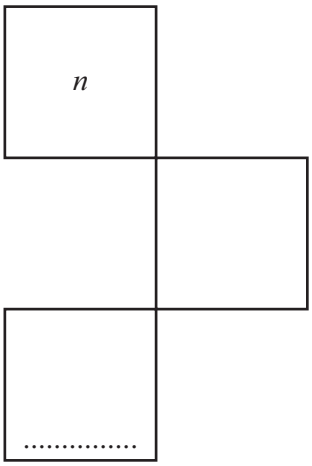

Complete the bottom square with an expression in terms of n, d and w. [1]

DO NOT WRITE IN THIS MARGIN
DO NOT WRITE IN THIS MARGIN
DO NOT WRITE IN THIS MARGIN
DO NOT WRITE IN THIS MARGIN
DO NOT WRITE IN THIS MARGIN

(b) The formula for the frame sum on this grid is

$$\text{frame sum} = 2dn + d^2(w+1)^2.$$

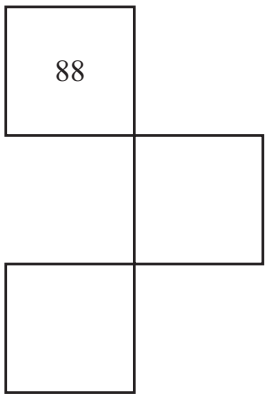

The frame sum for this frame is 1280.
All the numbers in the grid are positive integers.

(i) Show that $w = \dfrac{\sqrt{1280 - 176d}}{d} - 1$.

[3]

DO NOT WRITE IN THIS MARGIN
DO NOT WRITE IN THIS MARGIN
DO NOT WRITE IN THIS MARGIN
DO NOT WRITE IN THIS MARGIN
DO NOT WRITE IN THIS MARGIN

(ii) Complete the table.
Give non-integer values correct to 2 decimal places.

d	*w*
1	32.23
2	
3	
4	
5	
6	1.49
7	

[2]

(iii) Write down all the possible widths of the grid.

..... [1]

DO NOT WRITE IN THIS MARGIN
DO NOT WRITE IN THIS MARGIN
DO NOT WRITE IN THIS MARGIN
DO NOT WRITE IN THIS MARGIN
DO NOT WRITE IN THIS MARGIN

© Cambridge University Press & Assessment 2026

Section B

Modelling Cones and cylinders

You are advised to spend no longer than 45 minutes on this section.

In this task you will look at cylinders that fit inside cones.
All lengths are in centimetres.

You may find these formulas useful.

Volume, V, of cylinder of radius r, height h $\quad V = \pi r^2 h$

Volume, V, of cone of radius r, height h $\quad V = \frac{1}{3}\pi r^2 h$

DO NOT WRITE IN THIS MARGIN
DO NOT WRITE IN THIS MARGIN
DO NOT WRITE IN THIS MARGIN
DO NOT WRITE IN THIS MARGIN
DO NOT WRITE IN THIS MARGIN

5 The diagram shows a cylinder that fits inside a cone.
OA is the axis of symmetry.

The cone has height 20 and radius 10.
The cylinder has height 12 and radius x.

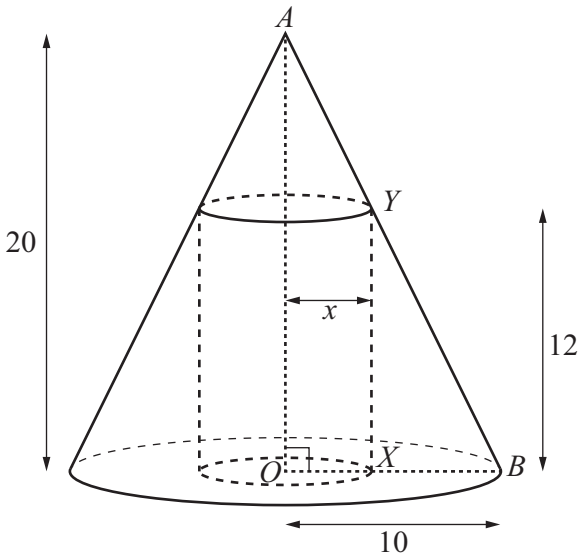

NOT TO SCALE

(a) The diagram shows triangles *YXB* and *AOB*.

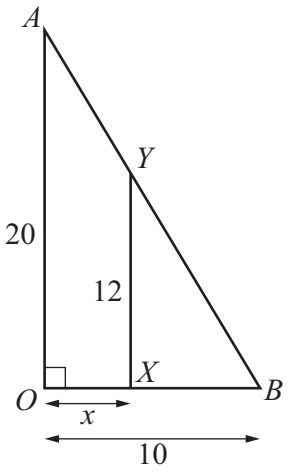

NOT TO SCALE

Triangle *YXB* is similar to triangle *AOB*.
$XB = 10 - x$

DO NOT WRITE IN THIS MARGIN
DO NOT WRITE IN THIS MARGIN
DO NOT WRITE IN THIS MARGIN
DO NOT WRITE IN THIS MARGIN
DO NOT WRITE IN THIS MARGIN

(i) Write the name of the correct line segment in the box.

$$\frac{XB}{OB} = \frac{\square}{OA}$$

[1]

(ii) Write the correct number in the box.

$$\frac{10-x}{10} = \frac{12}{\square}$$

[1]

(iii) Find the value of x.

..... [2]

(iv) Use your answer to **5(a)(iii)** to find the volume of the cylinder in terms of π .

..... [2]

DO NOT WRITE IN THIS MARGIN

(b) A different cylinder fits inside the same cone.
The cylinder has height 6.

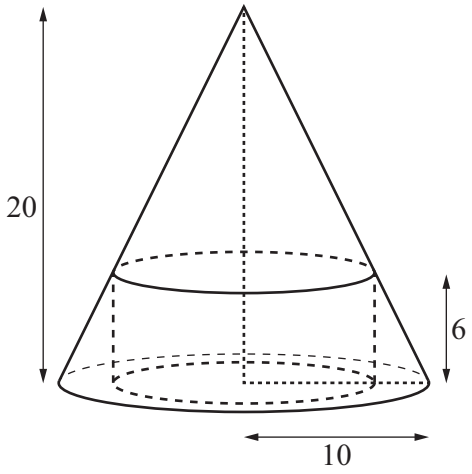

NOT TO SCALE

Find the volume of the cylinder.
Give your answer in terms of π .

..... [3]

DO NOT WRITE IN THIS MARGIN

© Cambridge University Press & Assessment 2026

DO NOT WRITE IN THIS MARGIN
DO NOT WRITE IN THIS MARGIN
DO NOT WRITE IN THIS MARGIN
DO NOT WRITE IN THIS MARGIN
DO NOT WRITE IN THIS MARGIN

Turn over

6 A cylinder of height h fits inside the cone.

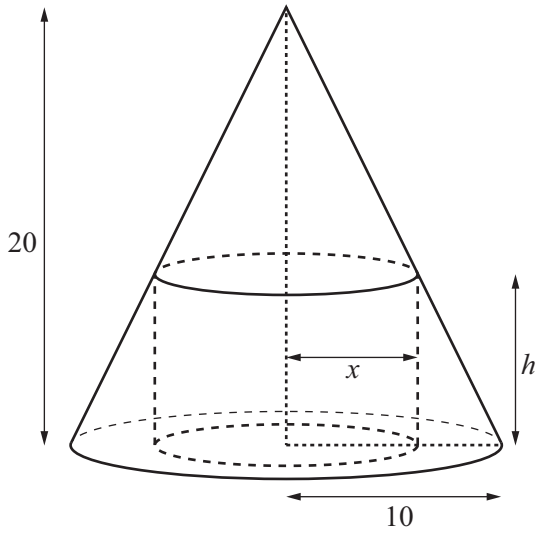

NOT TO SCALE

The cylinder has radius x and volume V.

(a) Show that a model for V is

$$V = \frac{\pi h(20-h)^2}{4}.$$

[4]

DO NOT WRITE IN THIS MARGIN
DO NOT WRITE IN THIS MARGIN
DO NOT WRITE IN THIS MARGIN
DO NOT WRITE IN THIS MARGIN
DO NOT WRITE IN THIS MARGIN

(b) Sketch the graph of $V = \frac{\pi h(20-h)^2}{4}$ for values of h between 0 and 20.



[3]

(c) Find the maximum volume of the cylinder.

..... [1]

(d) Find the height and the radius of the cylinder with the maximum volume.

height = ...

radius = ...

[3]

DO NOT WRITE IN THIS MARGIN
DO NOT WRITE IN THIS MARGIN
DO NOT WRITE IN THIS MARGIN
DO NOT WRITE IN THIS MARGIN
DO NOT WRITE IN THIS MARGIN

7 In this question, different sized cones enclose a cylinder of fixed dimensions.

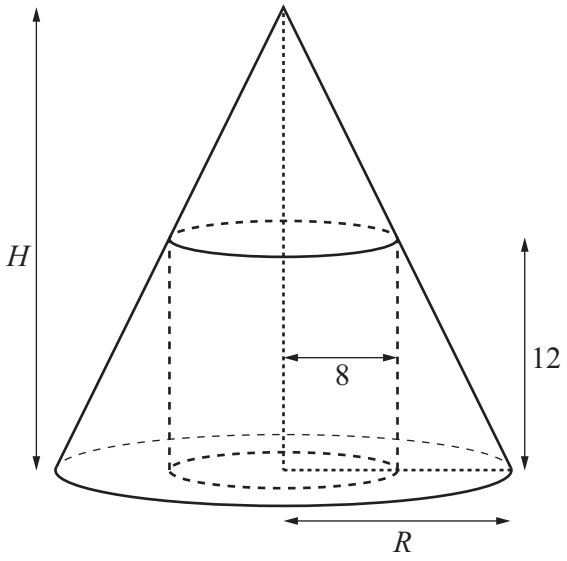

NOT TO SCALE

The cylinder has radius 8 and height 12.
The cone has radius R and height H.

(a) Find an expression for H in terms of R.

..... [2]

DO NOT WRITE IN THIS MARGIN
DO NOT WRITE IN THIS MARGIN
DO NOT WRITE IN THIS MARGIN
DO NOT WRITE IN THIS MARGIN
DO NOT WRITE IN THIS MARGIN

DO NOT WRITE IN THIS MARGIN
DO NOT WRITE IN THIS MARGIN
DO NOT WRITE IN THIS MARGIN
DO NOT WRITE IN THIS MARGIN
DO NOT WRITE IN THIS MARGIN

(b) (i) Show that a model for the volume of the cone, V, is

$$V = \frac{4\pi R^3}{R-8} .$$

[1]

(ii) The volume of the cone is a minimum when the radius is between 8 and 20.

Find the minimum volume of the cone.

..... [2]

© Cambridge University Press & Assessment 2026

BLANK PAGE

DO NOT WRITE IN THIS MARGIN
DO NOT WRITE IN THIS MARGIN
DO NOT WRITE IN THIS MARGIN
DO NOT WRITE IN THIS MARGIN
DO NOT WRITE IN THIS MARGIN

Permission to reproduce items where third-party owned material protected by copyright is included has been sought and cleared where possible. Every reasonable effort has been made by the publisher (Cambridge University Press & Assessment) to trace copyright holders, but if any items requiring clearance have unwittingly been included, the publisher will be pleased to make amends at the earliest possible opportunity.

To avoid the issue of disclosure of answer-related information to candidates, all copyright acknowledgements are reproduced online in our Copyright Acknowledgements Booklet. This is produced for each series of examinations and is freely available to download at www.cambridgeinternational.org after the live examination series.

Cambridge International Education is the name of our awarding body and a part of Cambridge University Press & Assessment, which is a department of the University of Cambridge.

© Cambridge University Press & Assessment 2026