CAMBRIDGE
International Education

Cambridge IGCSE™

CANDIDATE NAME

CENTRE NUMBER

CANDIDATE NUMBER

1466705303

CAMBRIDGE INTERNATIONAL MATHEMATICS **0607/63**

Paper 6 Investigation and Modelling (Extended) **May/June 2026**

1 hour 30 minutes

You must answer on the question paper.

No additional materials are needed.

INSTRUCTIONS

- Answer **all** questions.
- Use a black or dark blue pen. You may use an HB pencil for any diagrams or graphs.
- Write your name, centre number and candidate number in the boxes at the top of the page.
- Write your answer to each question in the space provided.
- Do **not** use an erasable pen. Do **not** use correction fluid or tape.
- Do **not** write on any bar codes.
- You should use a graphic display calculator where appropriate.
- You may use tracing paper.
- You must show all necessary working clearly, including sketches, to gain full marks for correct methods.
- In this paper you will be awarded marks for providing full reasons, examples and steps in your working to communicate your mathematics clearly and precisely.

INFORMATION

- The total mark for this paper is 50.
- The number of marks for each question or part question is shown in brackets [ ].

This document has **20** pages. Any blank pages are indicated.

© Cambridge University Press & Assessment 2026

Section A

Investigation Factors and multiples

You are advised to spend no more than 45 minutes on this section.

In this investigation you will look at the connection between factors and multiples of numbers.

A factor of a number divides into the number without leaving a remainder.
A multiple of a number is in that number's times table.

Examples

Factors of 10 are 1, 2, 5 and 10 — $10 \div 1 = 10$ remainder 0; $10 \div 2 = 5$ remainder 0; $10 \div 5 = 2$ remainder 0; $10 \div 10 = 1$ remainder 0

Any other number leaves a remainder — $10 \div 3 = 3$ remainder 1 so 3 is not a factor of 10

Multiples of 7 are 7, 14, 21, 28 and so on

$7 \times 1 = 7$ $7 \times 2 = 14$ $7 \times 3 = 21$ $7 \times 4 = 28$

1 (a) Complete this table.

number	factors	first six multiples
1	1	1, 2, 3, 4, 5, 6
2	1, 2	2, 4, 6, 8, 10, 12
3	1, 3	3, 6, 9, 12, 15, 18
4	1, 2, 4	4, 8, 12, 16, 20, 24
5	1, 5	5, 10, 15, 20, 25, 30
6	1, 2, 3, 6	6, 12, 18, 24, 30, 36
7	1, 7	7, 14, 21, 28, 35, 42
8		
9		9, 18, 27, 36, 45, 54
10	1, 2, 5, 10	10, 20, 30, 40, 50, 60

[2]

© Cambridge University Press & Assessment 2026

DO NOT WRITE IN THIS MARGIN
DO NOT WRITE IN THIS MARGIN
DO NOT WRITE IN THIS MARGIN
DO NOT WRITE IN THIS MARGIN
DO NOT WRITE IN THIS MARGIN

DO NOT WRITE IN THIS MARGIN
DO NOT WRITE IN THIS MARGIN
DO NOT WRITE IN THIS MARGIN
DO NOT WRITE IN THIS MARGIN
DO NOT WRITE IN THIS MARGIN

(b) The highest number that is both a factor of 4 and a factor of 10 is called the highest common factor (HCF) of 4 and 10.

The lowest number that is both a multiple of 4 and a multiple of 10 is called the lowest common multiple (LCM) of 4 and 10.

Use the table in **1(a)** to answer these questions.

(i) Write down the HCF and the LCM for 4 and 10.

HCF = ...

LCM = ...
[1]

(ii) Find the HCF and the LCM for 3 and 7.

HCF = ...

LCM = ...
[2]

2 When you are looking for the lowest common multiple (LCM) of two numbers you can write as many multiples of each number as you need.

(a) Complete this table.

	numbers (*a* and *b*)	**HCF**	**LCM**	***a* × *b***
1(b)(i)	4 and 10			40
1(b)(ii)	3 and 7			21
	9 and 12	3		108
	6 and 8	2		48
	5 and 9		45	45
	4 and 6		12	24
	3 and 10	1		30
	8 and 14			112

[3]

(b) Write down a connection between the HCF, the LCM and $a \times b$.

..... [1]

(c) 16 and another number have an HCF of 4 and an LCM of 80.

Find the other number.

..... [2]

© Cambridge University Press & Assessment 2026

DO NOT WRITE IN THIS MARGIN
DO NOT WRITE IN THIS MARGIN
DO NOT WRITE IN THIS MARGIN
DO NOT WRITE IN THIS MARGIN
DO NOT WRITE IN THIS MARGIN

3 a and b are two numbers.
x and y are different prime numbers.

$a = x \times x \times y \qquad = x^2y$
$b = x \times y \times y \times y = xy^3$

(a) Write down the HCF and the LCM of a and b.
Give each answer in terms of x and y using indices.

HCF = ...

LCM = ...
[2]

(b) Use **3(a)** to show that your connection in **2(b)** is true for a and b.

[2]

DO NOT WRITE IN THIS MARGIN

4 You now use sets of 3 numbers a, b and c.

(a) Complete this table.

numbers a b c	$a \times b \times c$	HCF of a, b, c (P)	LCM of a, b, c (Q)	HCF of a and b (R)	HCF of a and c (S)	HCF of b and c (T)
3 6 9	162	3	18	3	3	3
4 8 10	320	2	40	4	2	2
6 8 12	576	2	24	2		
5 10 4	200	1		5	1	2
12 9 15	1620		180		3	3
20 12 8	1920	4		4	4	
9 12 18	1944			3	9	6

[3]

(b) Complete this relationship using P, Q, R, S and T.

$(a \times b \times c) \times$ ..... = ... $\times$ ..... $\times$ ..... $\times$ ..... [2]

DO NOT WRITE IN THIS MARGIN DO NOT WRITE IN THIS MARGIN DO NOT WRITE IN THIS MARGIN DO NOT WRITE IN THIS MARGIN DO NOT WRITE IN THIS MARGIN

© Cambridge University Press & Assessment 2026

(c) In this question there are 3 numbers: 40, d and e.

40, d and e have HCF = 4.
40, d and e have LCM = 360.
$R = 4$, $S = 8$ and $T = 12$.

Find two different pairs of numbers, d and e.

$d =$ ..... and $e =$ .....

$d =$ ..... and $e =$ .....
[5]

DO NOT WRITE IN THIS MARGIN
DO NOT WRITE IN THIS MARGIN
DO NOT WRITE IN THIS MARGIN
DO NOT WRITE IN THIS MARGIN
DO NOT WRITE IN THIS MARGIN

Modelling Helix

You are advised to spend no more than 45 minutes on this section.

In this task you will look at the length of a line drawn on the curved surface of a cylinder.
This line is called a helix.

In this task, diagrams are not drawn to scale.

A rectangle of paper is wrapped around a cylinder with diameter 10 cm.
The long edges of the paper meet along the line AB.

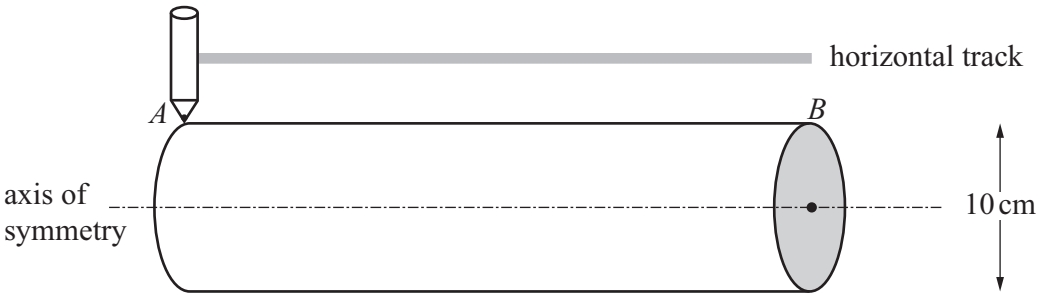

A pencil is fixed to a horizontal track above the cylinder.
The pencil rests on the paper at A.

You may find this formula useful. Circumference, C, of circle of diameter d. $C = \pi d$

DO NOT WRITE IN THIS MARGIN
DO NOT WRITE IN THIS MARGIN
DO NOT WRITE IN THIS MARGIN
DO NOT WRITE IN THIS MARGIN
DO NOT WRITE IN THIS MARGIN

© Cambridge University Press & Assessment 2026

5 The cylinder turns clockwise about its axis of symmetry.
The pencil does not move but draws a line on the paper.
The cylinder stops turning at the end of one full turn.

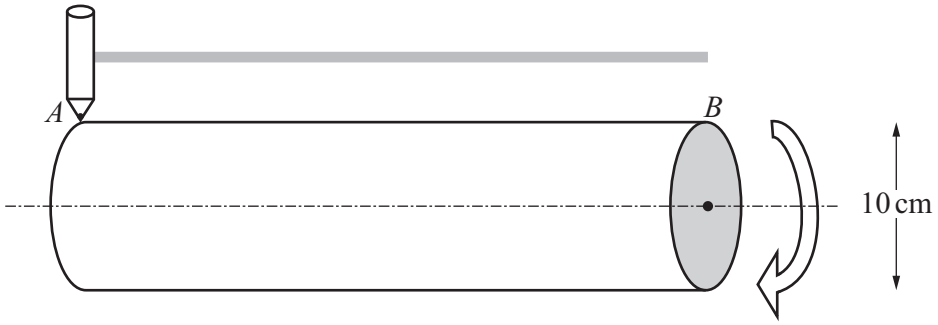

This diagram shows the paper when it is unwrapped from the cylinder.
AB is shown at the top and bottom of the rectangle because *AB* is where the two long edges meet on the cylinder.
The length of the line drawn by the pencil is shown by the line *AA* in the rectangle.

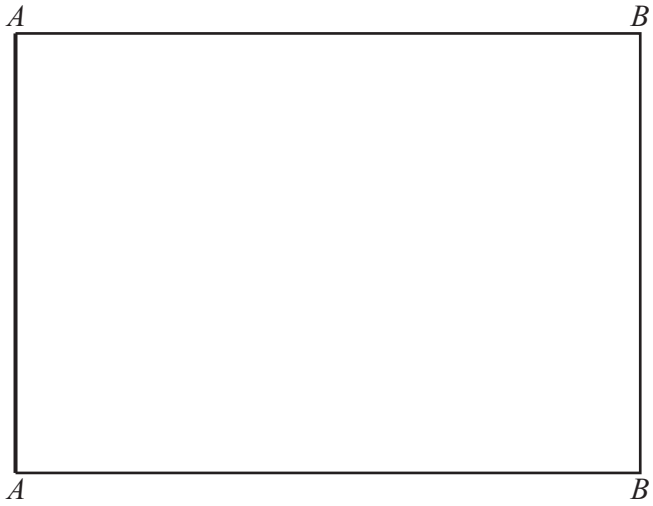

Explain why the length of the line drawn by the pencil is 31.4 cm, correct to 3 significant figures.

.....

..... [2]

DO NOT WRITE IN THIS MARGIN
DO NOT WRITE IN THIS MARGIN
DO NOT WRITE IN THIS MARGIN
DO NOT WRITE IN THIS MARGIN
DO NOT WRITE IN THIS MARGIN

6 A new piece of paper is wrapped around the cylinder in the same way.

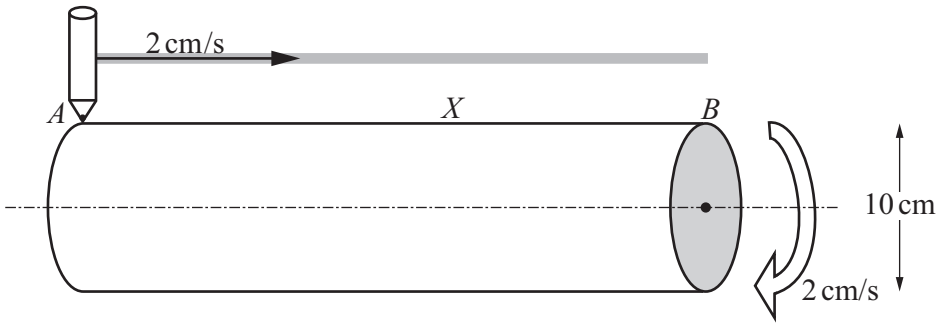

The cylinder turns clockwise about its axis of symmetry.
AB rotates at a speed of 2 cm/s as shown by the curved arrow.
The pencil moves along the horizontal track at a speed of 2 cm/s.

After one complete turn of the cylinder the pencil is at *X*, a point on *AB*.

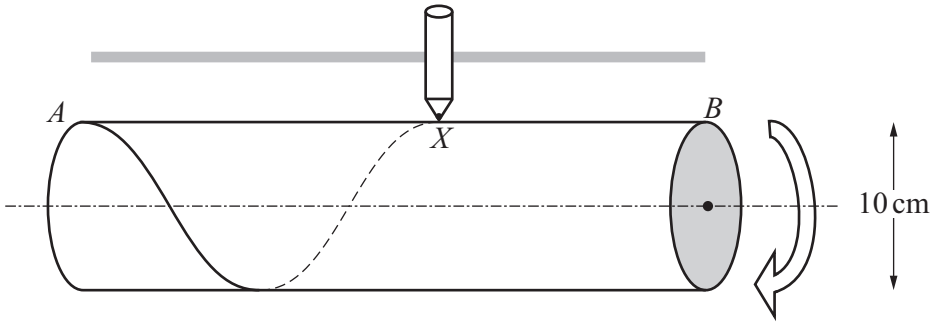

The paper is unwrapped from the cylinder.
On the unwrapped paper the curved line appears as a straight line.

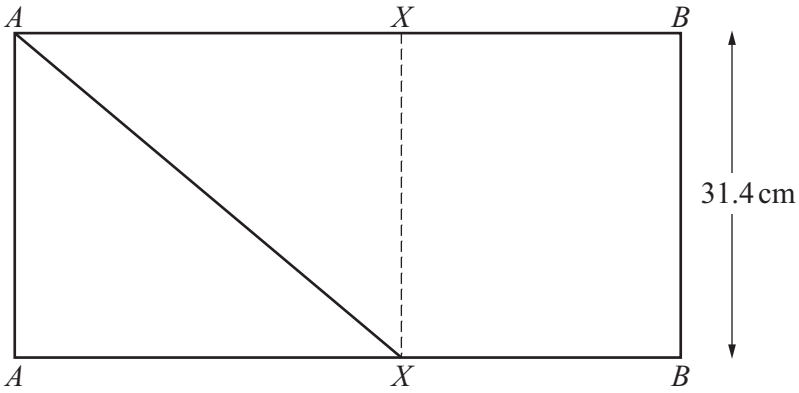

The curved line on the cylinder is called a helix.

DO NOT WRITE IN THIS MARGIN
DO NOT WRITE IN THIS MARGIN
DO NOT WRITE IN THIS MARGIN
DO NOT WRITE IN THIS MARGIN
DO NOT WRITE IN THIS MARGIN

© Cambridge University Press & Assessment 2026

The distance along *AB* to where the pencil meets *AB* again is called the pitch of the helix.

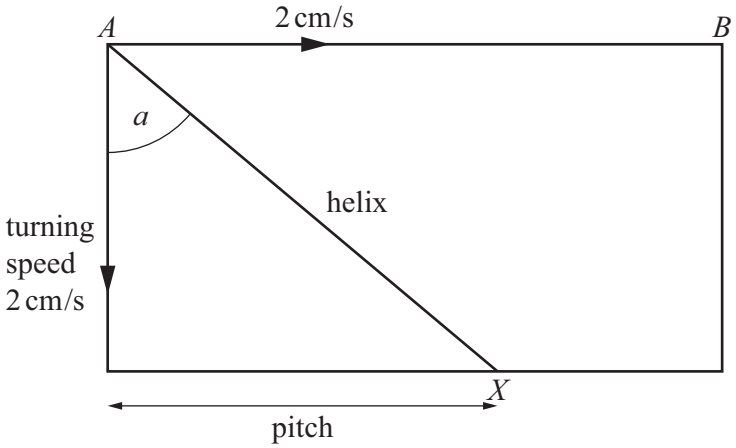

(a) Write down the size of *a*, the angle *AX* makes with the short side of the paper.

..... [1]

(b) Use **5** and **6(a)** to calculate the pitch and the length, *AX*, of the helix.

pitch = ...

length = ...
[4]

DO NOT WRITE IN THIS MARGIN

7 A new piece of paper is wrapped around the cylinder.
AB rotates at a speed of 3 cm/s.

The pencil moves along the horizontal track at a speed of 2 cm/s.
The helix is from *A* to *X*.

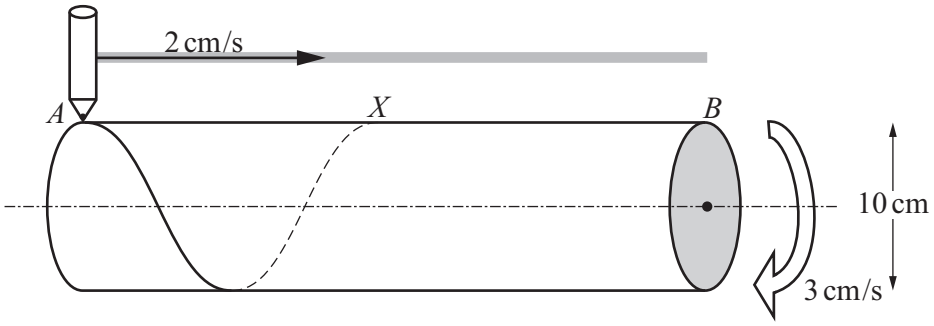

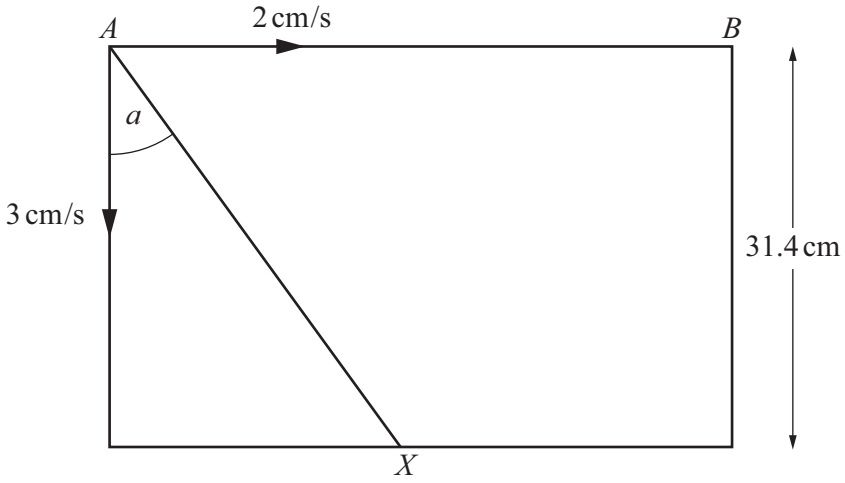

(a) Show that $a = 33.7°$, correct to 3 significant figures.

[2]

DO NOT WRITE IN THIS MARGIN
DO NOT WRITE IN THIS MARGIN
DO NOT WRITE IN THIS MARGIN
DO NOT WRITE IN THIS MARGIN
DO NOT WRITE IN THIS MARGIN

© Cambridge University Press & Assessment 2026

(b) Work out the pitch and the length of the helix.

pitch = ...

length = ...
[4]

DO NOT WRITE IN THIS MARGIN
DO NOT WRITE IN THIS MARGIN
DO NOT WRITE IN THIS MARGIN
DO NOT WRITE IN THIS MARGIN
DO NOT WRITE IN THIS MARGIN

8 A new piece of paper is wrapped around the cylinder.

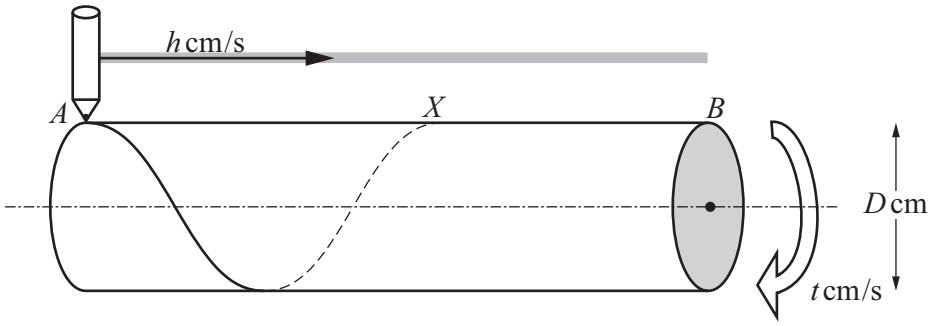

The cylinder has diameter D cm.
AB rotates at a speed of t cm/s.
The pencil moves along the horizontal track at a speed of h cm/s.
The helix is from A to X.

(a) Find a model for the pitch, P cm, in terms of h, t and D.

..... [2]

DO NOT WRITE IN THIS MARGIN
DO NOT WRITE IN THIS MARGIN
DO NOT WRITE IN THIS MARGIN
DO NOT WRITE IN THIS MARGIN
DO NOT WRITE IN THIS MARGIN

© Cambridge University Press & Assessment 2026

(b) Use Pythagoras' theorem and **8(a)** to show that a model for the length, H_1 cm, of the helix from A to X is

$$H_1 = \pi D\sqrt{1+\left(\frac{h}{t}\right)^2} \ .$$

[3]

DO NOT WRITE IN THIS MARGIN
DO NOT WRITE IN THIS MARGIN
DO NOT WRITE IN THIS MARGIN
DO NOT WRITE IN THIS MARGIN
DO NOT WRITE IN THIS MARGIN

(c) The cylinder rotates and the pencil moves until it reaches the end of the cylinder.
The cylinder has length L cm.

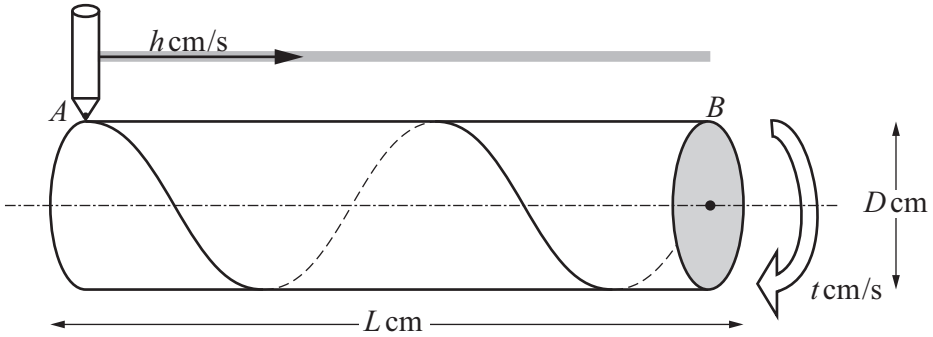

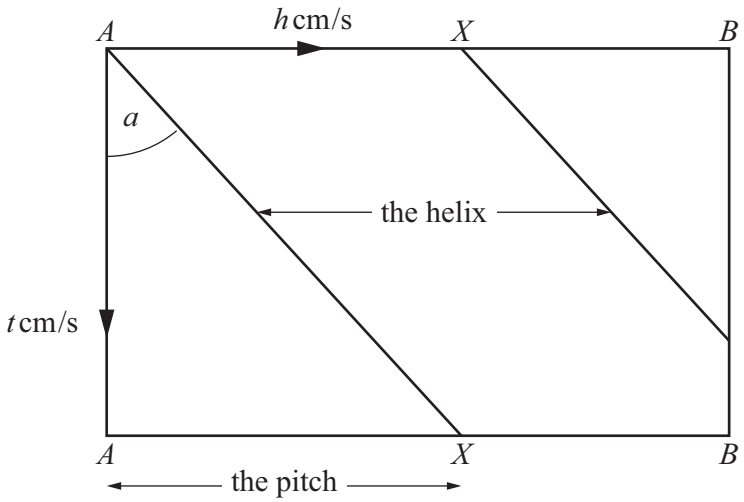

The length, H_2 cm, of the helix is now the total length of the two straight lines on the paper.

Use **8(a)** to find a model for the number of turns the cylinder makes before the pencil reaches the end of the cylinder.
Give your answer in terms of D, h, L and t.

..... [1]

DO NOT WRITE IN THIS MARGIN
DO NOT WRITE IN THIS MARGIN
DO NOT WRITE IN THIS MARGIN
DO NOT WRITE IN THIS MARGIN
DO NOT WRITE IN THIS MARGIN

© Cambridge University Press & Assessment 2026

(d) Use **8(b)** and **8(c)** to show that a model for the total length, H_2 cm, of the helix is

$$H_2 = L\sqrt{\frac{t^2}{h^2}+1}\ .$$

[3]

DO NOT WRITE IN THIS MARGIN
DO NOT WRITE IN THIS MARGIN
DO NOT WRITE IN THIS MARGIN
DO NOT WRITE IN THIS MARGIN
DO NOT WRITE IN THIS MARGIN

9 A cylinder has length 50 cm.
A pencil moves along the horizontal track at a speed of 3 cm/s.
The helix drawn has a total length of 100 cm.

Find the speed at which AB rotates.

..... [3]

DO NOT WRITE IN THIS MARGIN
DO NOT WRITE IN THIS MARGIN
DO NOT WRITE IN THIS MARGIN
DO NOT WRITE IN THIS MARGIN
DO NOT WRITE IN THIS MARGIN

© Cambridge University Press & Assessment 2026

BLANK PAGE

DO NOT WRITE IN THIS MARGIN
DO NOT WRITE IN THIS MARGIN
DO NOT WRITE IN THIS MARGIN
DO NOT WRITE IN THIS MARGIN
DO NOT WRITE IN THIS MARGIN

© Cambridge University Press & Assessment 2026

BLANK PAGE

DO NOT WRITE IN THIS MARGIN
DO NOT WRITE IN THIS MARGIN
DO NOT WRITE IN THIS MARGIN
DO NOT WRITE IN THIS MARGIN
DO NOT WRITE IN THIS MARGIN

Permission to reproduce items where third-party owned material protected by copyright is included has been sought and cleared where possible. Every reasonable effort has been made by the publisher (Cambridge University Press & Assessment) to trace copyright holders, but if any items requiring clearance have unwittingly been included, the publisher will be pleased to make amends at the earliest possible opportunity.

To avoid the issue of disclosure of answer-related information to candidates, all copyright acknowledgements are reproduced online in our Copyright Acknowledgements Booklet. This is produced for each series of examinations and is freely available to download at www.cambridgeinternational.org after the live examination series.

Cambridge International Education is the name of our awarding body and a part of Cambridge University Press & Assessment, which is a department of the University of Cambridge.

© Cambridge University Press & Assessment 2026