4024 Mathematics Paper 2 - Geometry

Topical questions | 15 questions

1. Question | 4024 May-June 2025 P2 V2 Q4

4

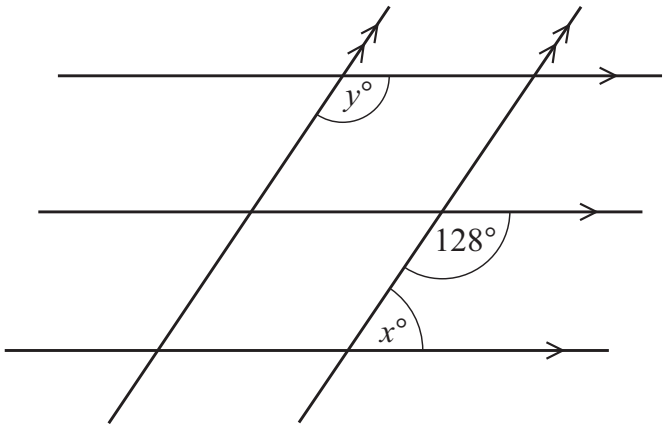

NOT TO SCALE

Find the value of x and the value of y.

$x =$ .....

$y =$ .....

[2]

2. Question | 4024 May-June 2025 P2 V2 Q8

8 Calculate the interior angle of a regular octagon.

..... [2]

3. Question | 4024 May-June 2025 P2 V2 Q14

14

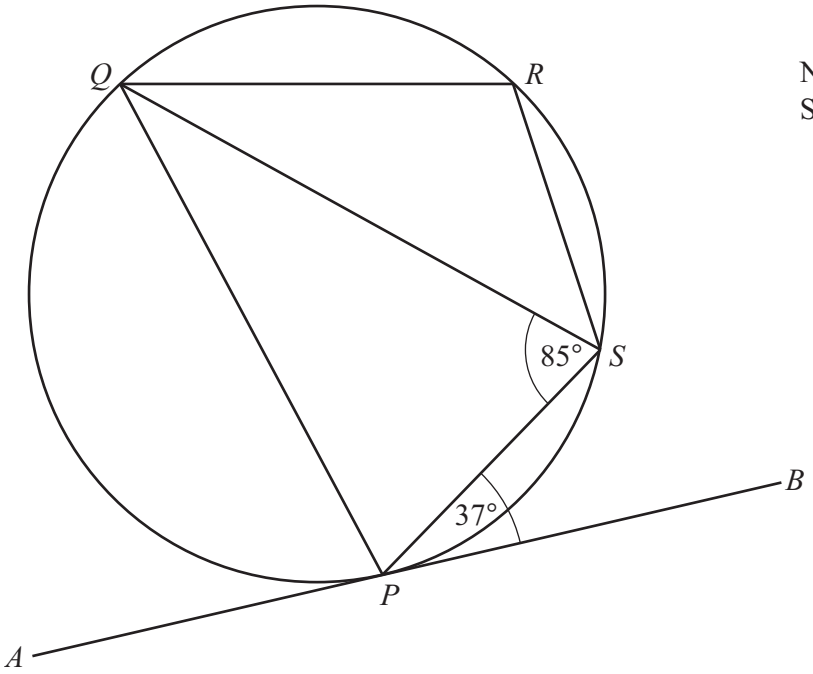

NOT TO SCALE

PQRS is a cyclic quadrilateral.
APB is a tangent to the circle at *P*.
Angle *SPB* = 37° and angle *PSQ* = 85°.

(a) Find angle *PQS*.

Angle *PQS* = ... [1]

(b) Find angle *QRS*.

Angle *QRS* = ... [2]

4. Question | 4024 May-June 2025 P2 V3 Q2

2 A rectangle has dimensions 2.4 cm by 5.6 cm.
The rectangle is enlarged by a scale factor of 3.25 .

Work out the dimensions of the enlarged rectangle.

..... cm by ..... cm [2]

5. Question | 4024 May-June 2025 P2 V3 Q4

4 **(a)** Shade **one** small square so the diagram has rotational symmetry of order 2.

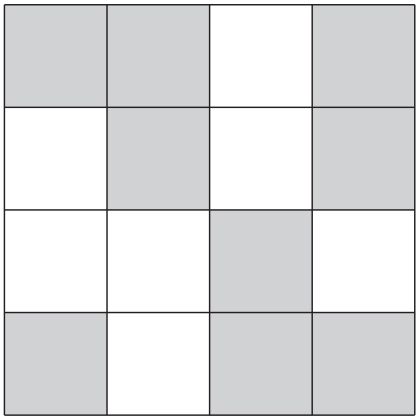

[1]

(b) Shade **one** small square so the diagram has 1 line of symmetry.

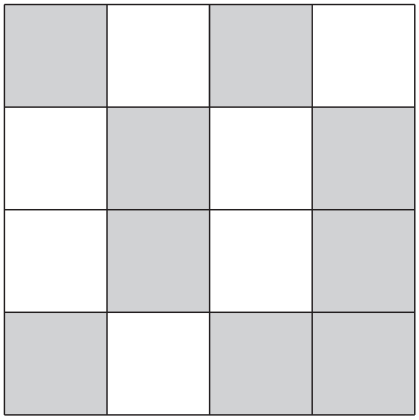

[1]

6. Question | 4024 May-June 2025 P2 V3 Q17

17

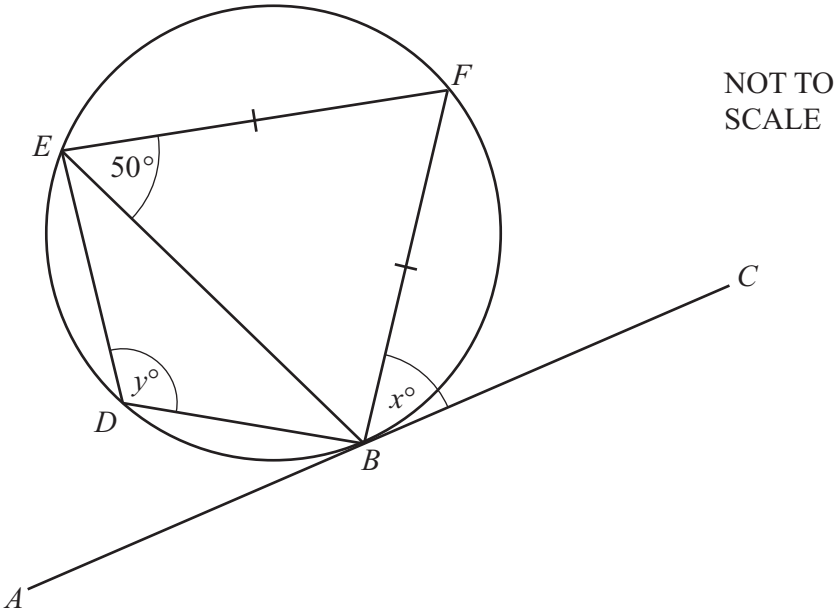

NOT TO SCALE

Points B, D, E and F lie on a circle.
AC is a tangent to the circle at B.

Angle $BEF = 50°$ and $EF = BF$.

(a) Find the value of x.
Give a geometrical reason for your answer.

$x =$ ..... because .....

..... [2]

(b) Find the value of y.
Give a geometrical reason for each step of your working.

.....

.....

.....

$y =$ ..... [3]

7. Question | 4024 Oct-Nov 2025 P2 V1 Q5

5

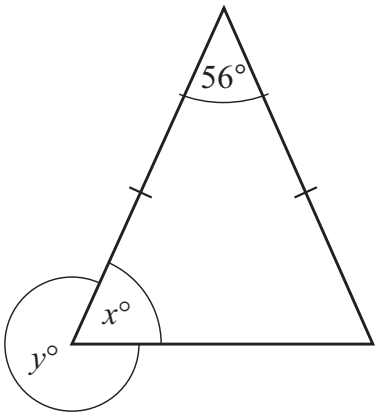

NOT TO SCALE

The diagram shows an isosceles triangle.

(a) Work out the value of x.

$x =$ ..... [2]

(b) Work out the value of y.

$y =$ ..... [1]

8. Question | 4024 Oct-Nov 2025 P2 V1 Q7

7 Work out the size of the interior angle of a regular decagon.

..... [2]

9. Question | 4024 Oct-Nov 2025 P2 V2 Q4

4 In triangle ABC, $AB = 8.5\,\text{cm}$, $AC = 6\,\text{cm}$ and $BC = 7\,\text{cm}$.

(a) **Using a ruler and compasses only**, construct triangle ABC.
Side AB has been drawn for you.

A B

[2]

(b) Measure angle BAC.

Angle $BAC =$ ..... [1]

10. Question | 4024 Oct-Nov 2025 P2 V2 Q6

6 The scale of a map is 1 : 5000.
The length of a path on the map is 8.3 cm.

Work out the actual length of the path.
Give your answer in metres.

..... m [2]

11. Question | 4024 Oct-Nov 2025 P2 V2 Q9

9

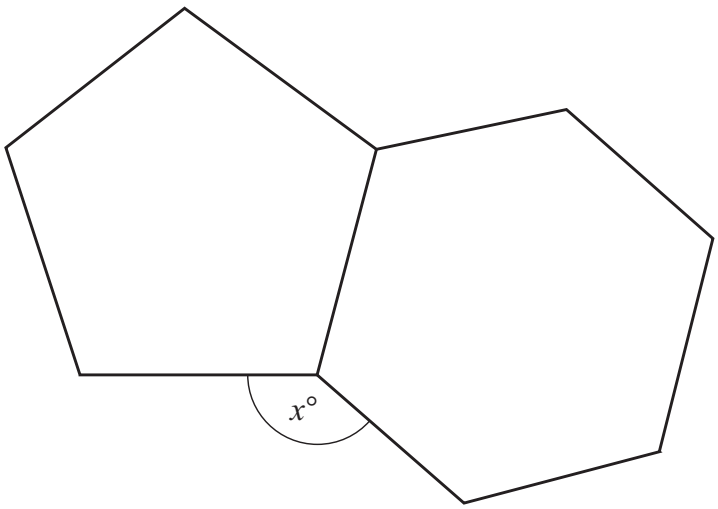

NOT TO SCALE

The diagram shows a regular pentagon and a regular hexagon joined along one edge.

Find the value of x.

$x =$ ..... [3]

12. Question | 4024 Specimen 2025 P2 Q8

8

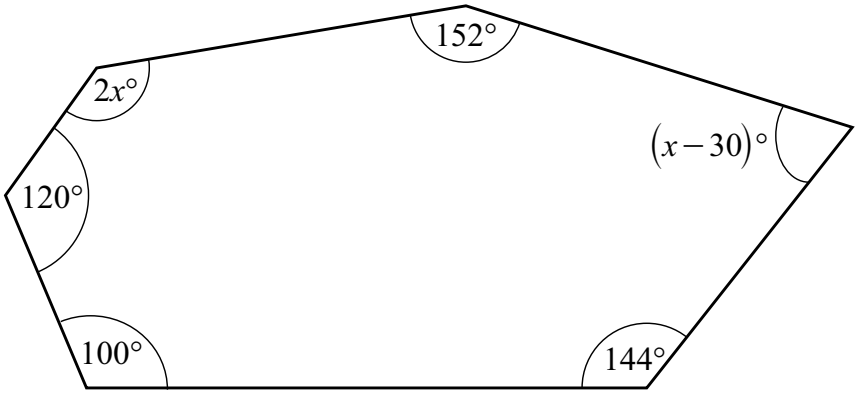

NOT TO SCALE

The diagram shows a hexagon.

Write an equation and solve it to find the value of x.

$x =$ ..... [4]

13. Question | 4024 May-June 2026 P2 V2 Q18

18

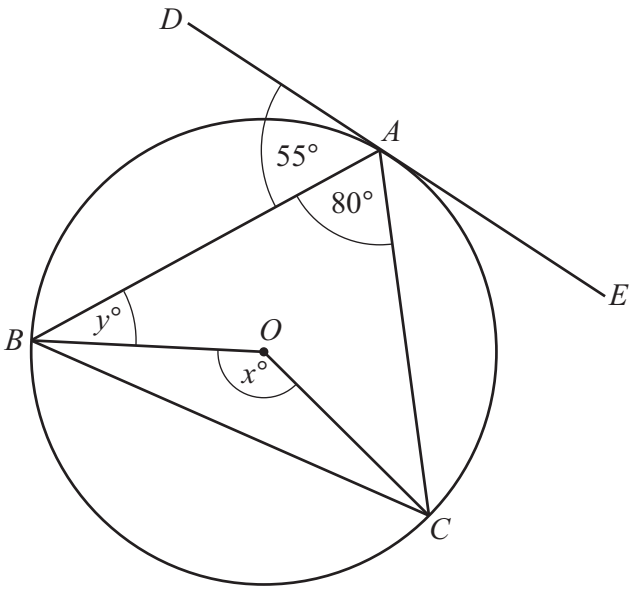

NOT TO SCALE

A, B and C lie on a circle, centre O.
DE is a tangent to the circle at A.
Angle $BAC = 80°$ and angle $BAD = 55°$.

(a) Find the value of x.

Give a geometrical reason for your answer.

$x =$ ..... because .....

..... [2]

(b) Find the value of y.

$y =$ ..... [2]

14. Question | 4024 May-June 2026 P2 V3 Q3

3 Three interior angles of a hexagon are 110°, 140° and 150°.
The other three interior angles are in the ratio 2 : 3 : 5 .

Calculate the size of the largest angle in the hexagon.

..... [4]

15. Question | 4024 May-June 2026 P2 V3 Q12

12

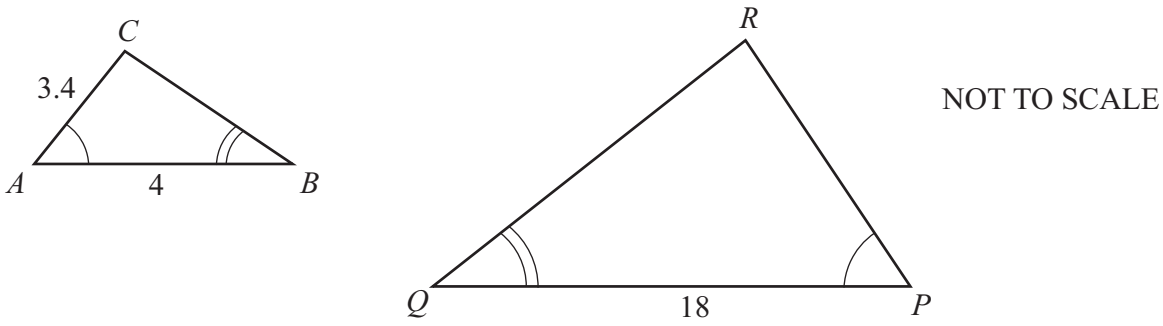

Triangle ABC is mathematically similar to triangle PQR.
Angle BAC = angle QPR and angle ABC = angle PQR.
$AC = 3.4$ cm, $AB = 4$ cm and $PQ = 18$ cm.

(a) Work out PR.

$PR =$ ..... cm [2]

(b) The area of triangle PQR is $56.7\,\text{cm}^2$.

Calculate the area of triangle ABC.

..... cm^2 [2]