4024 Mathematics Paper 2 - Mensuration

Topical questions | 12 questions

1. Question | 4024 May-June 2025 P2 V2 Q5

5 Convert $6.1\,\text{m}^2$ to cm^2.

..... cm^2 [1]

2. Question part 1/2 | 4024 May-June 2025 P2 V2 Q21

21

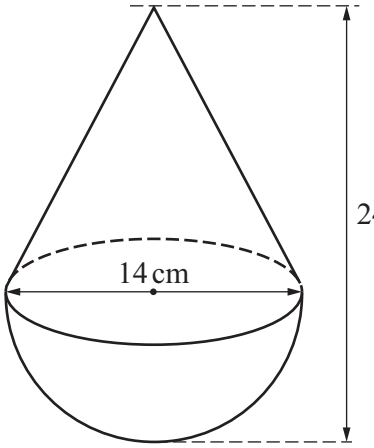

NOT TO SCALE

The diagram shows a solid formed by joining a cone to a hemisphere.
The diameter of the cone is 14 cm and the diameter of the hemisphere is 14 cm.
The total height of the solid is 24 cm.

(a) Calculate the volume of the solid.

..... cm^3 [3]

(b) Show that the total surface area of the solid is $712\,\text{cm}^2$, correct to the nearest integer.

[5]

(c) A smaller solid is mathematically similar to this solid.
The total surface area of the smaller solid is $242\,\text{cm}^2$.

Calculate the total height of the smaller solid.

..... cm [3]

3. Question | 4024 May-June 2025 P2 V3 Q5

5 **(a)** Write 6300 cm in metres.

..... m [1]

(b) Write $450\,\text{cm}^3$ in litres.

..... litres [1]

4. Question | 4024 Oct-Nov 2025 P2 V1 Q3

3 In this question, all lengths are in centimetres.
The diagram shows the net of a cuboid.

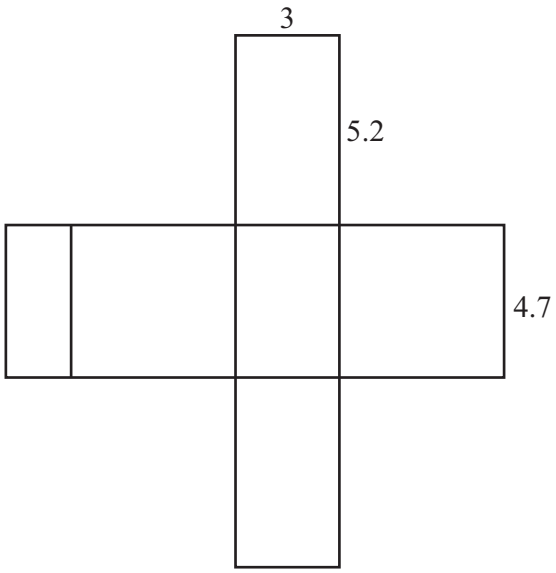

NOT TO SCALE

(a) Find the total surface area of the cuboid.

..... cm^2 [2]

(b) Write down the number of planes of symmetry of the cuboid.

..... [1]

5. Question | 4024 Oct-Nov 2025 P2 V2 Q3

3 Idris has 5 kg of rice.
He cooks rice for 12 people.
He uses 75 g of rice for each person.

Work out how much rice Idris has left over.
Give your answer in grams.

..... g [2]

6. Question | 4024 Oct-Nov 2025 P2 V2 Q23

23

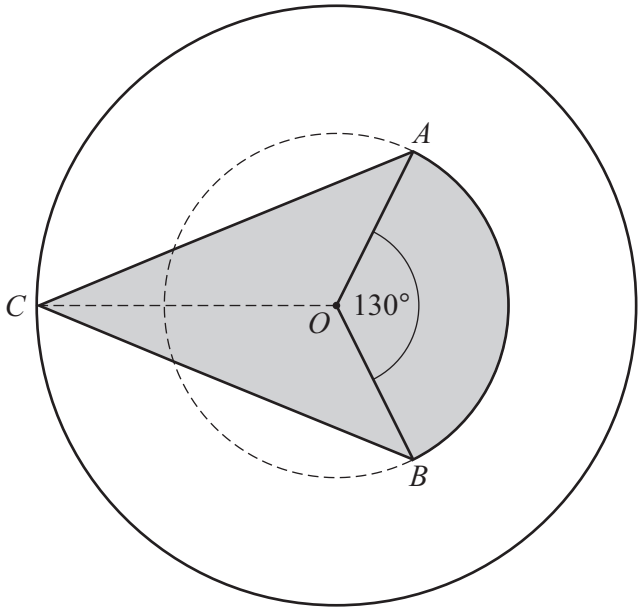

NOT TO SCALE

The diagram shows a shaded area in a large circle, centre O.
The radius of the large circle is 10 cm.

OAB is a sector of a small circle, centre O.
The radius of the small circle is 7 cm and the sector angle is 130°.
C is on the circumference of the large circle and $AC = BC$.

Calculate the percentage of the area of the large circle that is shaded.

..... % [5]

7. Question | 4024 Specimen 2025 P2 Q6

6

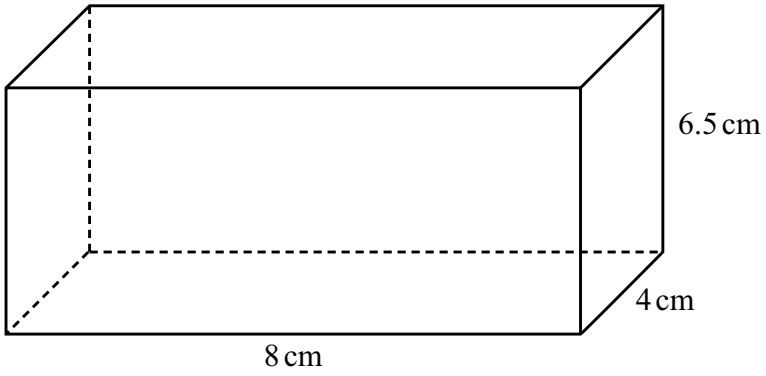

NOT TO SCALE

The diagram shows a cuboid.

Calculate the volume of the cuboid.

..... cm^3 [1]

8. Question | 4024 Specimen 2025 P2 Q11

11 Maya builds a patio in her garden in the shape of a cylinder, with radius 2 m and a height of 0.08 m.

(a) The patio is made from concrete.
The density of the concrete is 2500 kg/m^3.

Calculate the mass of the concrete used to build the patio.
[Density = mass ÷ volume]

..... kg [4]

(b) Maya wants to put tiles on the surface of her patio, as shown on the diagram.
Each tile is a sector with arc length 75 cm.

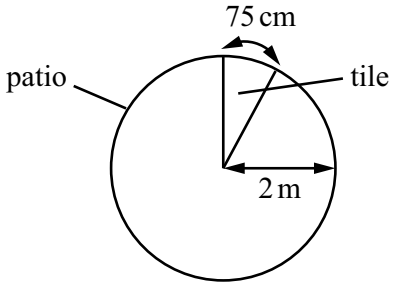

Explain why the tiles do **not** fit exactly on the surface of the patio.

..... [3]

9. Question | 4024 Specimen 2025 P2 Q25

25

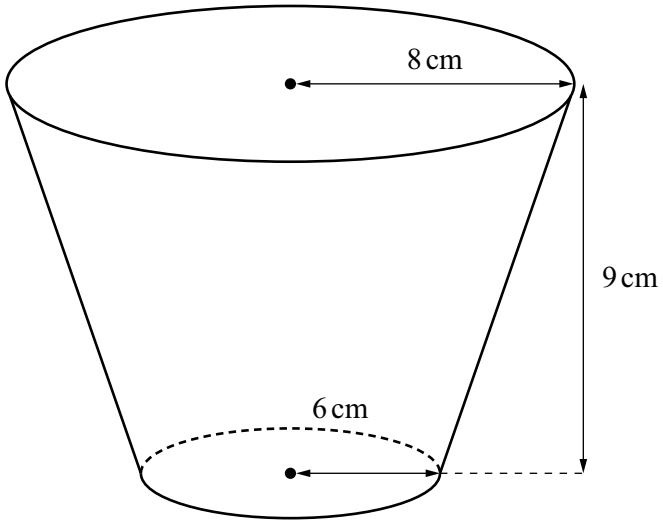

The diagram shows a bowl in the shape of a frustum.

Calculate the volume of the bowl.

..... cm^3 [5]

10. Question | 4024 May-June 2026 P2 V2 Q3

3 The diagram shows the net of a cuboid made from four congruent rectangles and two congruent squares.

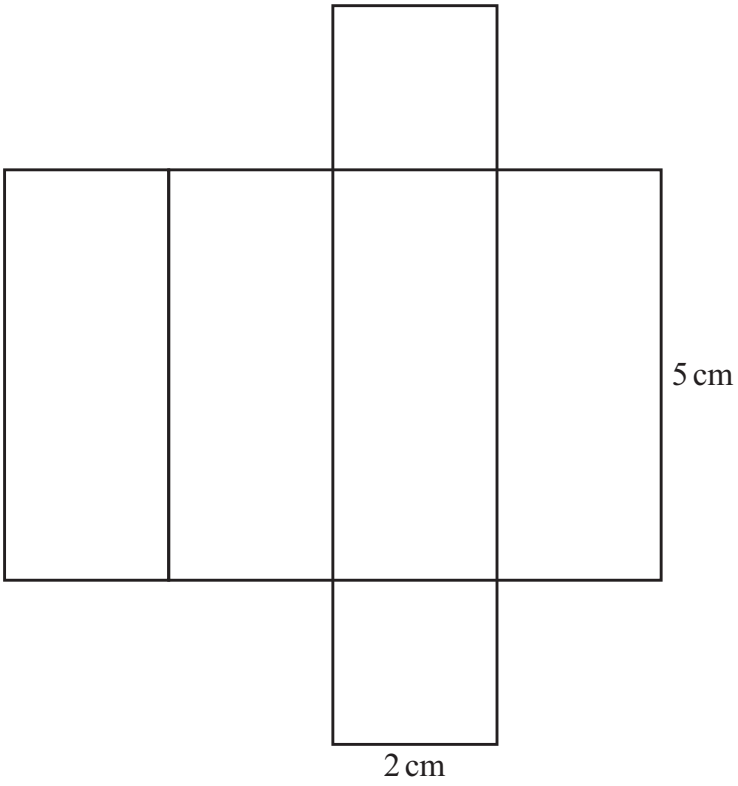

Find the total length of the edges of the cuboid.

..... cm [2]

11. Question part 1/2 | 4024 May-June 2026 P2 V2 Q23

23

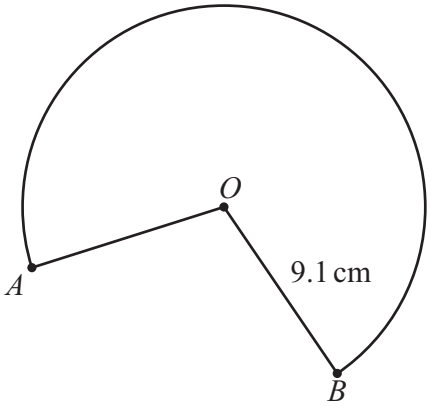

NOT TO SCALE

The diagram shows a sector of a circle with centre O and radius 9.1 cm.
The length of the major arc AB is 44 cm.

(a) Find the angle of the major sector AOB.

..... [3]

(b) Jamila joins OA to OB to form the curved surface of a cone.

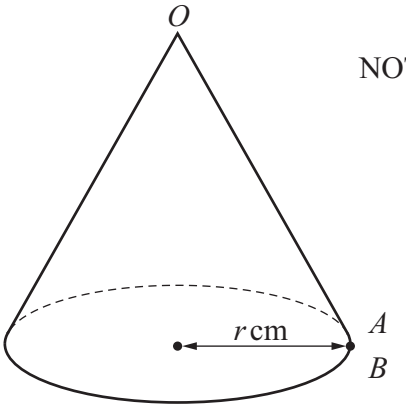

NOT TO SCALE

(i) Show that the radius, r, of the cone is 7.0 cm, correct to 1 decimal place.

[2]

11. Question part 2/2 | 4024 May-June 2026 P2 V2 Q23

(ii) Calculate the volume of the cone.

..... cm^3 [4]

(iii) Oliver has a cone that is mathematically similar to Jamila's cone.
The volume of Oliver's cone is $2387\,cm^3$.

Calculate the radius of Oliver's cone.

..... cm [3]

12. Question | 4024 May-June 2026 P2 V3 Q24

24 The diagram shows the frustum of a cone.
All the lengths are in centimetres.

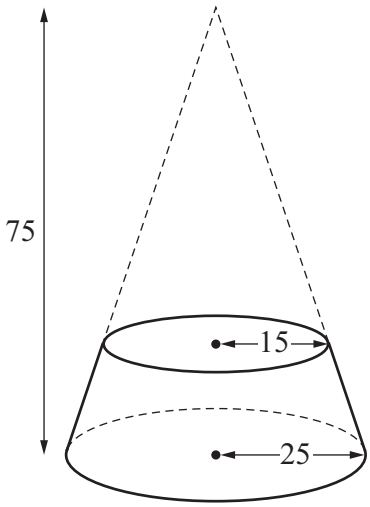

NOT TO SCALE

Calculate the total surface area of the frustum.

..... cm^2 [6]