CAMBRIDGE
International Education

Cambridge O Level

CANDIDATE NAME

CENTRE NUMBER

CANDIDATE NUMBER

7482821900

MATHEMATICS (SYLLABUS D) **4024/23**

Paper 2 Calculator **May/June 2026**

2 hours

You must answer on the question paper.

You will need: Geometrical instruments

INSTRUCTIONS

- Answer **all** questions.
- Use a black or dark blue pen. You may use an HB pencil for any diagrams or graphs.
- Write your name, centre number and candidate number in the boxes at the top of the page.
- Write your answer to each question in the space provided.
- Do **not** use an erasable pen. Do **not** use correction fluid or tape.
- Do **not** write on any bar codes.
- You should use a scientific calculator where appropriate.
- You may use tracing paper.
- You must show all necessary working clearly.
- Give non-exact numerical answers correct to 3 significant figures, or 1 decimal place for angles in degrees, unless a different level of accuracy is specified in the question.
- For π, use either your calculator value or 3.142.

INFORMATION

- The total mark for this paper is 100.
- The number of marks for each question or part question is shown in brackets [ ].

This document has **20** pages. Any blank pages are indicated.

© Cambridge University Press & Assessment 2026

List of formulas

Area, A, of triangle, base b, height h.	$A = \frac{1}{2}bh$
Area, A, of circle of radius r.	$A = \pi r^2$
Circumference, C, of circle of radius r.	$C = 2\pi r$
Curved surface area, A, of cylinder of radius r, height h.	$A = 2\pi rh$
Curved surface area, A, of cone of radius r, sloping edge l.	$A = \pi rl$
Surface area, A, of sphere of radius r.	$A = 4\pi r^2$
Volume, V, of prism, cross-sectional area A, length l.	$V = Al$
Volume, V, of pyramid, base area A, height h.	$V = \frac{1}{3}Ah$
Volume, V, of cylinder of radius r, height h.	$V = \pi r^2 h$
Volume, V, of cone of radius r, height h.	$V = \frac{1}{3}\pi r^2 h$
Volume, V, of sphere of radius r.	$V = \frac{4}{3}\pi r^3$
For the equation $ax^2 + bx + c = 0$, where $a \neq 0$,	$x = \frac{-b \pm \sqrt{b^2 - 4ac}}{2a}$

For the triangle shown,

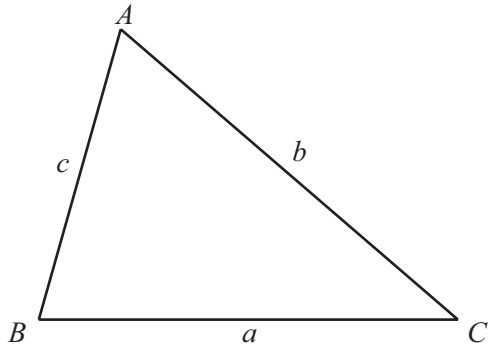

$$\frac{a}{\sin A} = \frac{b}{\sin B} = \frac{c}{\sin C}$$

$$a^2 = b^2 + c^2 - 2bc\cos A$$

$$\text{Area} = \frac{1}{2}ab\sin C$$

© Cambridge University Press & Assessment 2026

DO NOT WRITE IN THIS MARGIN
DO NOT WRITE IN THIS MARGIN
DO NOT WRITE IN THIS MARGIN
DO NOT WRITE IN THIS MARGIN
DO NOT WRITE IN THIS MARGIN

1 **(a)** Write 412 396 correct to the nearest 100.

..... [1]

(b) Write 3.1349 correct to 2 decimal places.

..... [1]

2 Flo buys 5 cups of tea for $2.50 each and 3 cups of coffee for $3.40 each.

Work out how much change she receives from $30.

$ ..... [3]

DO NOT WRITE IN THIS MARGIN

3 Three interior angles of a hexagon are 110°, 140° and 150°.
The other three interior angles are in the ratio $2 : 3 : 5$.

Calculate the size of the largest angle in the hexagon.

..... [4]

4 **(a)** Represent the inequality $-4 < x \leqslant 1$ on the number line.

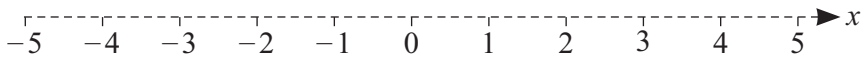

[2]

(b) Solve.

$3x < 6$

..... [1]

DO NOT WRITE IN THIS MARGIN
DO NOT WRITE IN THIS MARGIN
DO NOT WRITE IN THIS MARGIN
DO NOT WRITE IN THIS MARGIN
DO NOT WRITE IN THIS MARGIN

© Cambridge University Press & Assessment 2026

5 The distance–time graph shows the journey of a bus.

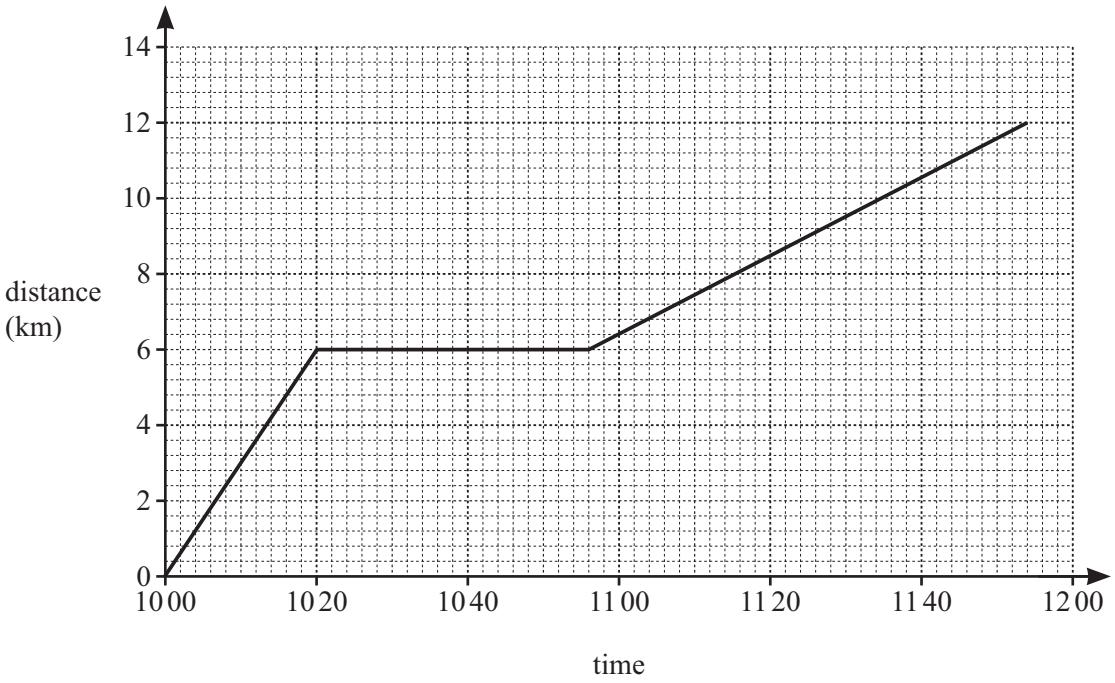

(a) The bus is not moving for part of its journey.

Find the total time, in minutes, that the bus is **not** moving.

..... minutes [1]

(b) Calculate the average speed of the bus for the whole journey.
Give your answer in kilometres per hour.

..... km/h [3]

(c) A cyclist completes the same journey as the bus.
The cyclist travels at a constant speed.
The journey of the cyclist starts at 10 30 and finishes at 11 30.

(i) Draw a line on the distance–time graph to show the journey of the cyclist. [2]

(ii) Find the distance from the start of the route to the point that the cyclist passes the bus.

..... km [1]

© Cambridge University Press & Assessment 2026

DO NOT WRITE IN THIS MARGIN
DO NOT WRITE IN THIS MARGIN
DO NOT WRITE IN THIS MARGIN
DO NOT WRITE IN THIS MARGIN
DO NOT WRITE IN THIS MARGIN

6 Factorise.

(a) $4a - 2$

..... [1]

(b) $3x^2 + 6x$

..... [2]

7 The diagram shows point A and point B.

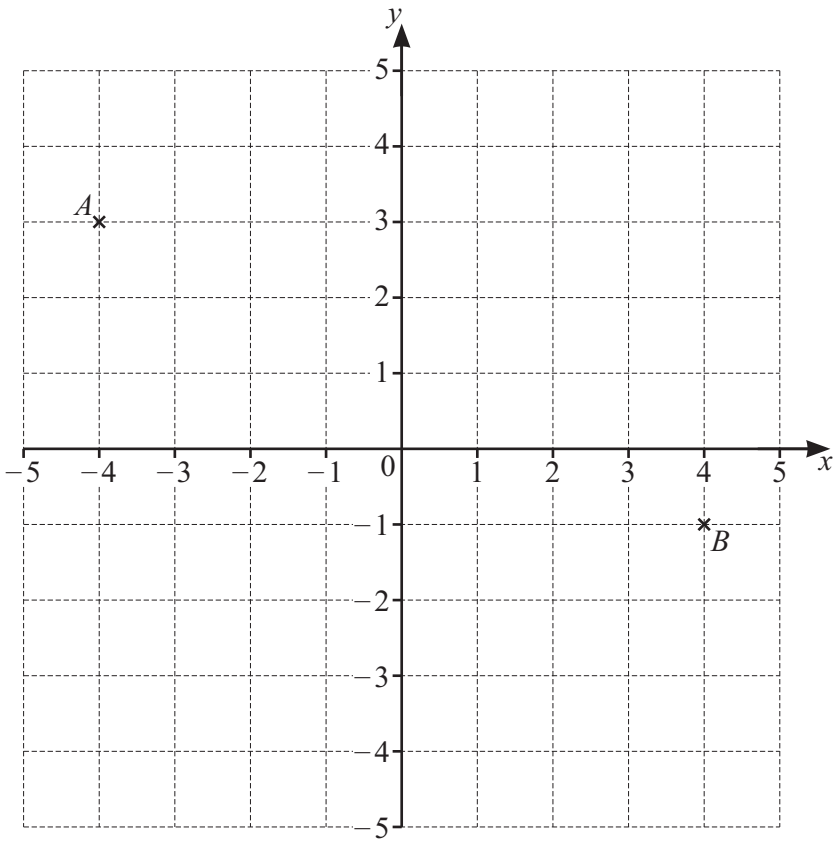

(a) Write down the coordinates of point A.

(..... , ...) [1]

(b) Work out the gradient of AB.

..... [2]

© Cambridge University Press & Assessment 2026

DO NOT WRITE IN THIS MARGIN
DO NOT WRITE IN THIS MARGIN
DO NOT WRITE IN THIS MARGIN
DO NOT WRITE IN THIS MARGIN
DO NOT WRITE IN THIS MARGIN

DO NOT WRITE IN THIS MARGIN
DO NOT WRITE IN THIS MARGIN
DO NOT WRITE IN THIS MARGIN
DO NOT WRITE IN THIS MARGIN
DO NOT WRITE IN THIS MARGIN

8 Solve.

(a) $12x + 3 = 7$

$x =$ ..... [2]

(b) $\dfrac{8-y}{3} = 5$

$y =$ ..... [2]

9 D is the point $(3, -2)$ and E is the point $(-1, 8)$.

(a) Find $\overrightarrow{DE}$.

$\overrightarrow{DE} = \begin{pmatrix} \quad \\ \quad \end{pmatrix}$ [2]

(b) $\overrightarrow{FE} = \begin{pmatrix} 2 \\ -4 \end{pmatrix}$

Find the coordinates of point F.

(..... , ...) [2]

© Cambridge University Press & Assessment 2026

10 A bag contains red counters and yellow counters.
The probability of choosing a red counter is 0.3 .
A counter is chosen at random from the bag and is then replaced.
A second counter is then chosen at random.

(a) Complete the tree diagram.

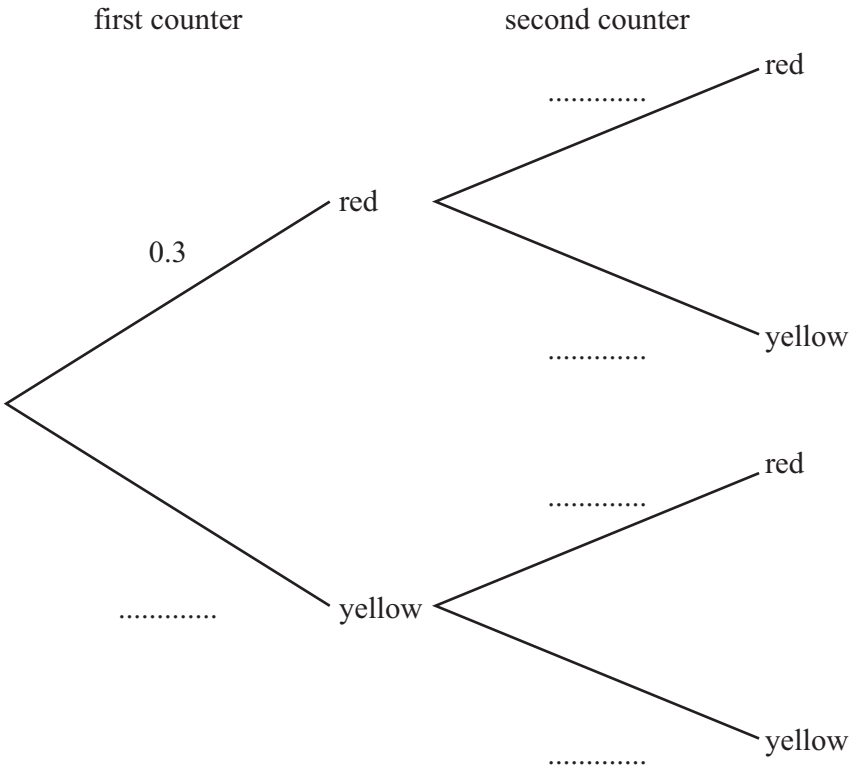

[2]

(b) Work out the probability that both counters are yellow.

..... [1]

DO NOT WRITE IN THIS MARGIN
DO NOT WRITE IN THIS MARGIN
DO NOT WRITE IN THIS MARGIN
DO NOT WRITE IN THIS MARGIN
DO NOT WRITE IN THIS MARGIN

© Cambridge University Press & Assessment 2026

11 $\mathscr{E} = \{1, 2, 3, 4, 5, 6, 7, 8, 9, 10\}$
$A = \{x : x \text{ is a factor of } 10\}$
$B = \{x : x \text{ is a multiple of } 2\}$

(a) Complete the Venn diagram.

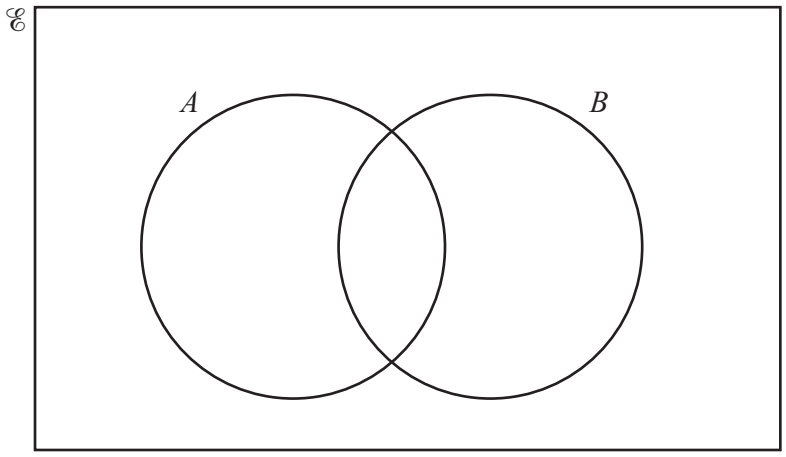

[2]

(b) List the elements of $(A \cup B)'$.

..... [1]

(c) Find $\mathrm{n}(A' \cup B)$.

..... [1]

DO NOT WRITE IN THIS MARGIN

12

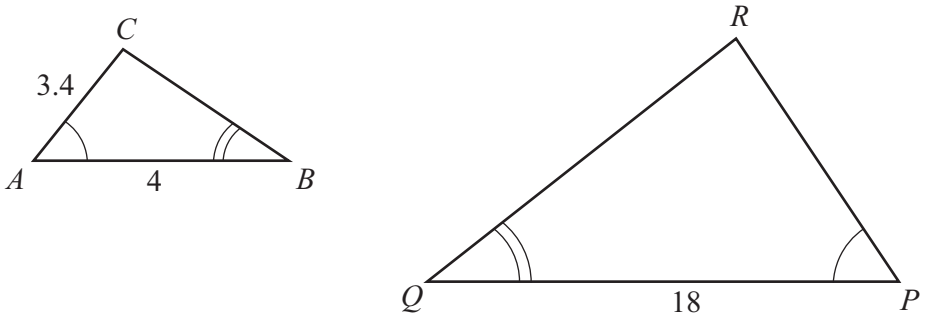

NOT TO SCALE

Triangle ABC is mathematically similar to triangle PQR.
Angle BAC = angle QPR and angle ABC = angle PQR.
$AC = 3.4$ cm, $AB = 4$ cm and $PQ = 18$ cm.

(a) Work out PR.

$PR =$ ..... cm [2]

(b) The area of triangle PQR is $56.7\,\text{cm}^2$.

Calculate the area of triangle ABC.

..... cm^2 [2]

DO NOT WRITE IN THIS MARGIN

13 A group of 100 students each solve a problem.
The cumulative frequency diagram shows the times taken to solve the problem.

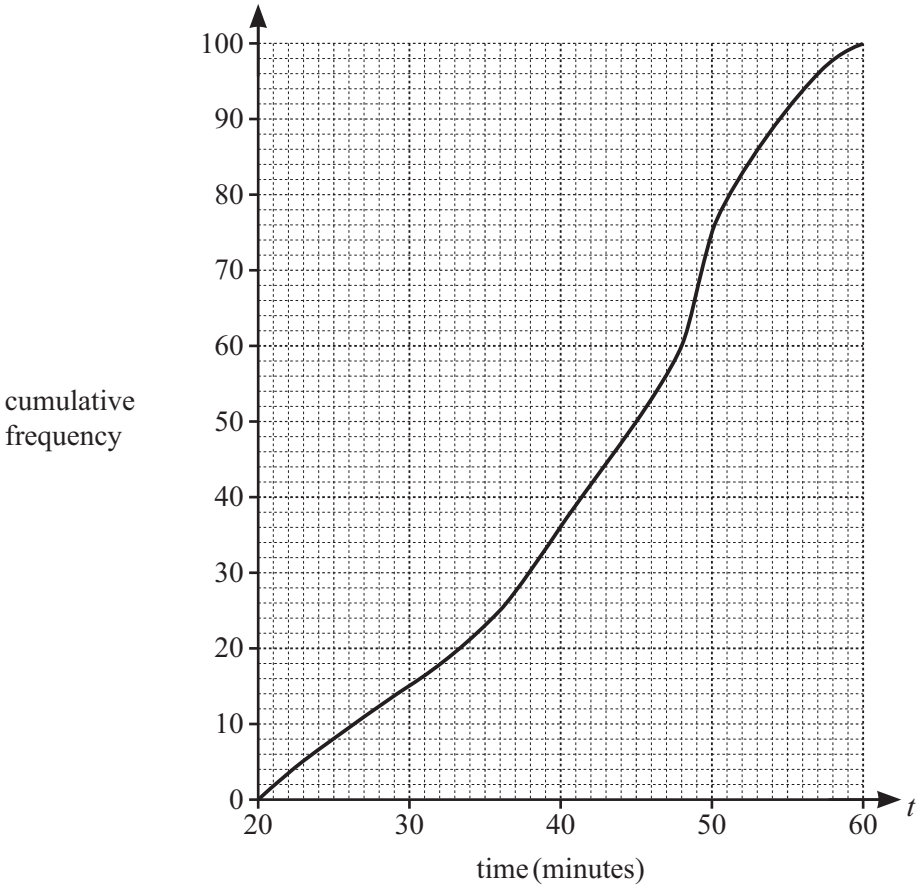

(a) Use the cumulative frequency diagram to find an estimate for

(i) the median

..... minutes [1]

(ii) the interquartile range.

..... minutes [2]

(b) Complete the frequency table.

time (t minutes)	$20 < t \leqslant 30$	$30 < t \leqslant 40$	$40 < t \leqslant 50$	$50 < t \leqslant 60$
frequency	15			

[2]

DO NOT WRITE IN THIS MARGIN

14 The price of a computer is reduced by 18% in a sale.
The sale price of the computer is \$303.40 .

Calculate the price of the computer before the sale.

\$ ..... [2]

15 $f(x) = 6x + 8$ $g(x) = \frac{x-1}{3}$

(a) Find $f(-1)$.

..... [1]

(b) Find $g^{-1}(x)$.

$g^{-1}(x) =$ ..... [2]

(c) Solve $fg(x) = 14$.

$x =$ ..... [3]

© Cambridge University Press & Assessment 2026

DO NOT WRITE IN THIS MARGIN
DO NOT WRITE IN THIS MARGIN
DO NOT WRITE IN THIS MARGIN
DO NOT WRITE IN THIS MARGIN
DO NOT WRITE IN THIS MARGIN

16 The table shows the times taken by 50 children to complete their homework.

time (t minutes)	$10 < t \leqslant 30$	$30 < t \leqslant 50$	$50 < t \leqslant 70$	$70 < t \leqslant 90$
frequency	12	18	14	6

(a) Write down the modal class.

..... $< t \leqslant$ ..... [1]

(b) Calculate an estimate of the mean time taken to complete the homework.

..... minutes [4]

(c) One of the 50 children is chosen at random.

Find the probability that this child took 30 minutes or less to complete their homework.

..... [1]

DO NOT WRITE IN THIS MARGIN

17 Zahir invests \$3000 in a savings account which pays compound interest at a rate of x% per year. At the end of 6 years, there is \$3918 in the account.

Calculate the value of x.

$x =$ ..... [3]

18 The width, w cm, of a rectangle is 7 cm, correct to the nearest centimetre.

(a) Complete this statement about the value of w.

..... $\leqslant w <$ ..... [2]

(b) The area of the same rectangle is 161.8 cm^2, correct to the nearest 0.1 cm^2.

Calculate the upper bound for the length of the rectangle.

..... cm [2]

DO NOT WRITE IN THIS MARGIN

© Cambridge University Press & Assessment 2026

19 The diagram shows quadrilateral $ABCD$.

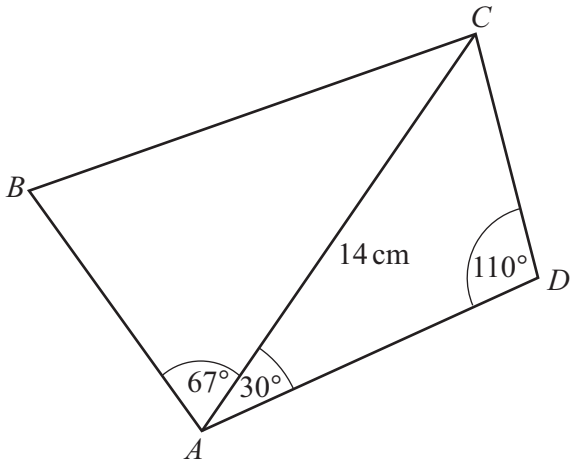

NOT TO SCALE

(a) Calculate AD.

..... cm [3]

(b) The area of triangle ABC is $50.9\,\text{cm}^2$.

Show that $AB = 7.9\,\text{cm}$, correct to 1 decimal place.

[2]

(c) Calculate BC.

..... cm [3]

DO NOT WRITE IN THIS MARGIN

20 a is inversely proportional to the cube of c.
When $a = -200$, $c = 0.1$.

Find a when $c = 2$.

$a =$ ..... [3]

21 The diagram shows a cuboid.

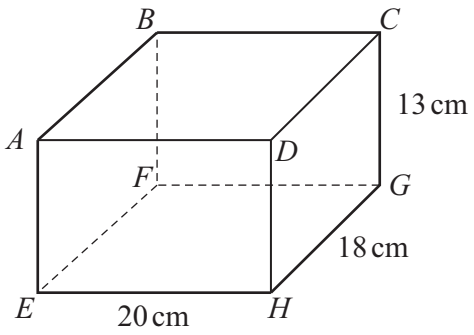

NOT TO SCALE

Calculate the angle between EC and the face $ABFE$.

..... [4]

© Cambridge University Press & Assessment 2026

DO NOT WRITE IN THIS MARGIN
DO NOT WRITE IN THIS MARGIN
DO NOT WRITE IN THIS MARGIN
DO NOT WRITE IN THIS MARGIN
DO NOT WRITE IN THIS MARGIN

22 **(a)** Expand.

$3(x-5)$

..... [1]

(b) Expand and simplify.

$(x+1)(2x-3)(x+4)$

..... [3]

DO NOT WRITE IN THIS MARGIN
DO NOT WRITE IN THIS MARGIN
DO NOT WRITE IN THIS MARGIN
DO NOT WRITE IN THIS MARGIN
DO NOT WRITE IN THIS MARGIN

23 Simplify.

$$\frac{3x^2 - 11x - 4}{2x^2 - 32}$$

..... [5]

DO NOT WRITE IN THIS MARGIN
DO NOT WRITE IN THIS MARGIN
DO NOT WRITE IN THIS MARGIN
DO NOT WRITE IN THIS MARGIN
DO NOT WRITE IN THIS MARGIN

© Cambridge University Press & Assessment 2026

24 The diagram shows the frustum of a cone.
All the lengths are in centimetres.

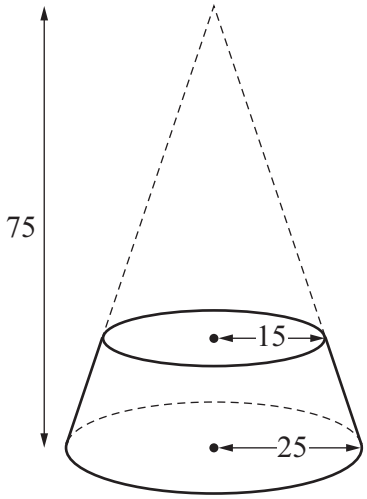

NOT TO SCALE

Calculate the total surface area of the frustum.

..... cm^2 [6]

DO NOT WRITE IN THIS MARGIN
DO NOT WRITE IN THIS MARGIN
DO NOT WRITE IN THIS MARGIN
DO NOT WRITE IN THIS MARGIN
DO NOT WRITE IN THIS MARGIN

BLANK PAGE

DO NOT WRITE IN THIS MARGIN
DO NOT WRITE IN THIS MARGIN
DO NOT WRITE IN THIS MARGIN
DO NOT WRITE IN THIS MARGIN
DO NOT WRITE IN THIS MARGIN

Permission to reproduce items where third-party owned material protected by copyright is included has been sought and cleared where possible. Every reasonable effort has been made by the publisher (Cambridge University Press & Assessment) to trace copyright holders, but if any items requiring clearance have unwittingly been included, the publisher will be pleased to make amends at the earliest possible opportunity.

To avoid the issue of disclosure of answer-related information to candidates, all copyright acknowledgements are reproduced online in our Copyright Acknowledgements Booklet. This is produced for each series of examinations and is freely available to download at www.cambridgeinternational.org after the live examination series.

Cambridge International Education is the name of our awarding body and a part of Cambridge University Press & Assessment, which is a department of the University of Cambridge.

© Cambridge University Press & Assessment 2026