1. Question part 1/3 | 5054 May-June 2023 P4 V2 Q3

3 A student investigates the image formed by a converging lens.

The student arranges the apparatus as shown in Fig. 3.1.

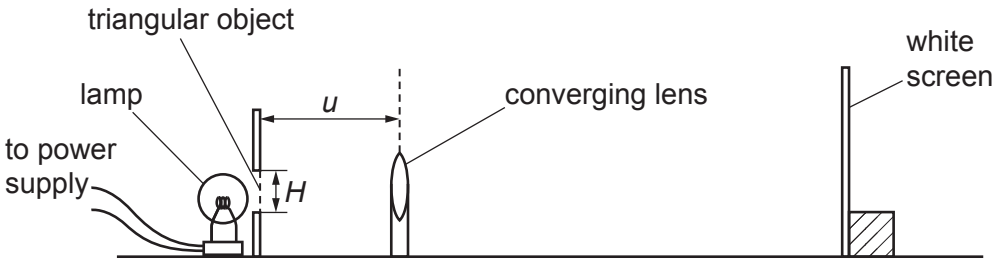

Fig. 3.1 (not to scale)

The illuminated triangular object is shown full size in Fig. 3.2.

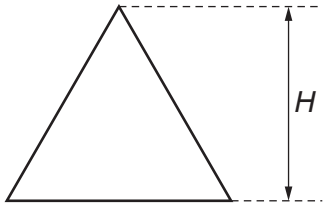

Fig. 3.2

(a) Measure and record the height *H* of the triangular object.

H = ... cm [1]

(b) The student:

- switches on the lamp and places the lens a distance *u* = 20.0 cm from the triangular object
- adjusts the position of the screen until a sharp, focussed image of the triangular object is formed on the screen.

The image is shown full-size in Fig. 3.3.

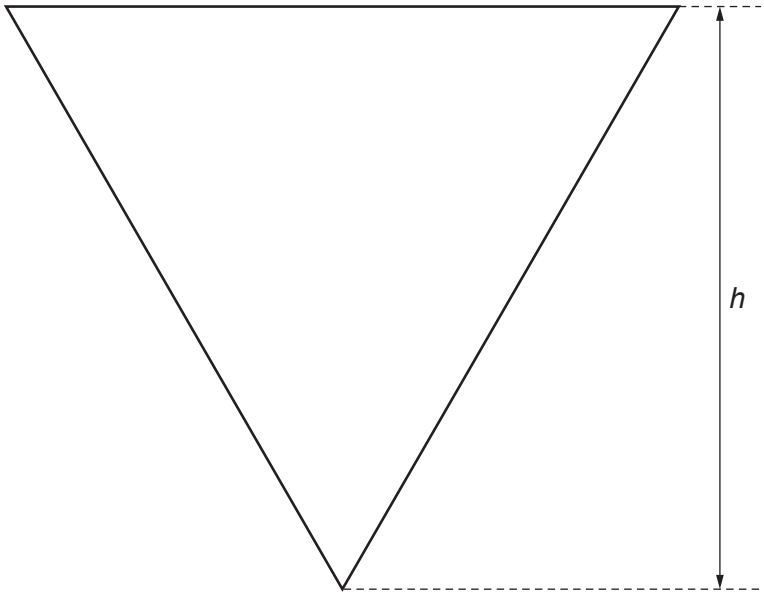

Fig. 3.3

1. Question part 2/3 | 5054 May-June 2023 P4 V2 Q3

(i) Measure the height h of the image on the screen shown in Fig. 3.3 on page 11.

h = ... [1]

(ii) Calculate the value of $\frac{1}{h}$.

Give your answer to 2 significant figures.

$\frac{1}{h}$ = ... [1]

Add your values for h and $\frac{1}{h}$ to Table 3.1.

(c) The student repeats **(b)** for different values of u.

He records all his readings in Table 3.1.

Table 3.1

u/cm	h	$\frac{1}{h}$ .....
20.0		
25.0	3.9	
30.0	2.6	
40.0	1.6	
50.0	1.1	

(i) Complete the headers by adding appropriate units. [1]

(ii) Calculate the remaining values of $\frac{1}{h}$ and add them to Table 3.1. [1]

(d) The screen is a square sheet of white card of side 10 cm. Look at the data in Table 3.1 and suggest why the student does not use values of u which are less than 20.0 cm.

.....

..... [1]

(e) On the grid provided, plot a graph of $\frac{1}{h}$ on the y-axis against u on the x-axis.

Start both axes from the origin (0, 0). Draw the straight line of best fit.

1. Question part 3/3 | 5054 May-June 2023 P4 V2 Q3

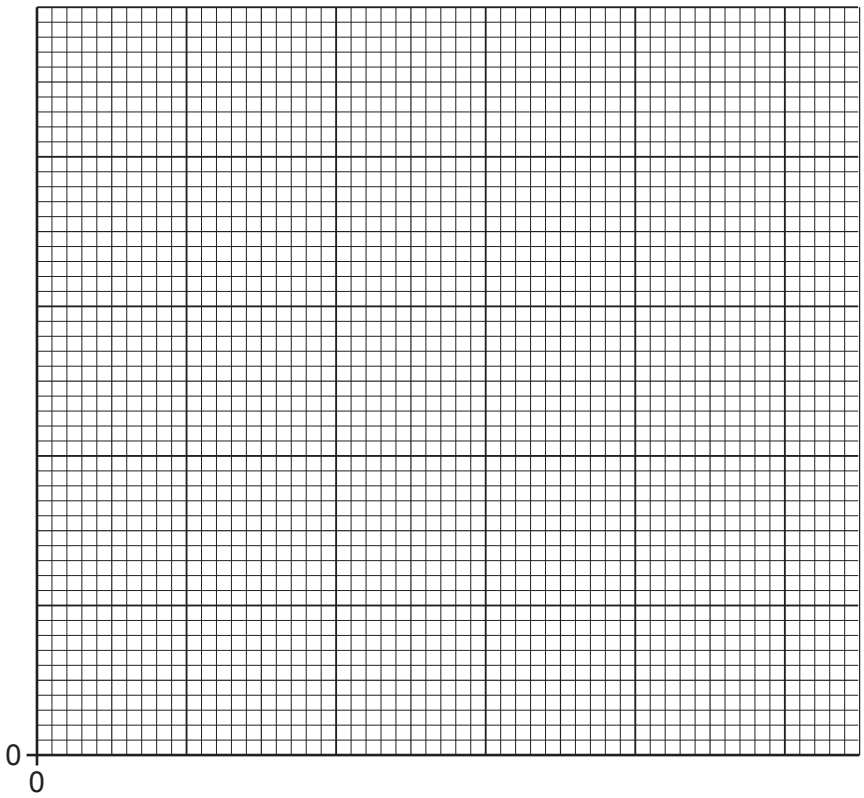

[4]

(f) **(i)** Calculate the gradient *m* of your line. Show all working and indicate on the graph the values you use.

m = ... [2]

(ii) Calculate the focal length *f* of the lens. Use your value of *H* from **(a)** and the equation:

$$f = \frac{1}{mH}$$

f = ... cm [1]

(g) When measuring the height of the image on the screen, the student's hand and the ruler obstruct the light from the object and prevent it from reaching the screen.

Suggest **one** improvement to the apparatus used by the student to overcome this problem.

.....

..... [1]

[Total: 14]

1 A student determines the speed of a wavefront on the surface of water.

The student fills a plate with water and uses a dropping pipette to let one drop of water fall into the centre of the plate as shown in Fig. 1.1.

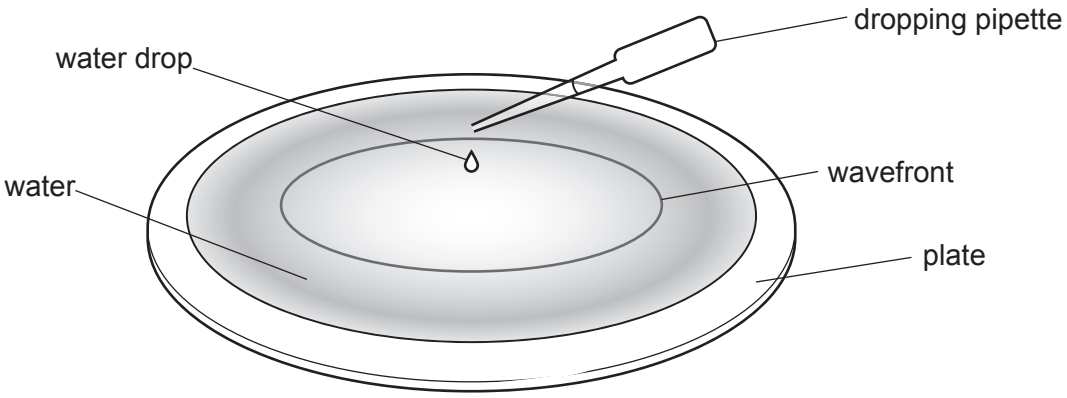

Fig. 1.1

The wavefront that is produced travels outwards to the rim of the plate and then reflects back to the centre.

(a) Fig. 1.2 shows a scale marked on the side of the dropping pipette.

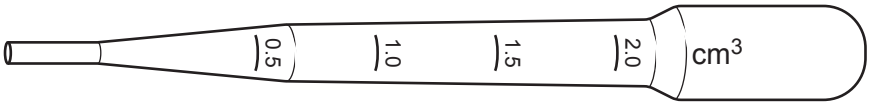

Fig. 1.2

Describe the technique the student uses to put 1.0 cm^3 of water into the dropping pipette.

.....

.....

.....

..... [3]

(b) The student observes the wavefront travel outwards from the centre of the plate and then reflect from the rim back to the centre.

Fig. 1.3 is a side view of the wavefront as it spreads out across the diameter *D* of the plate.

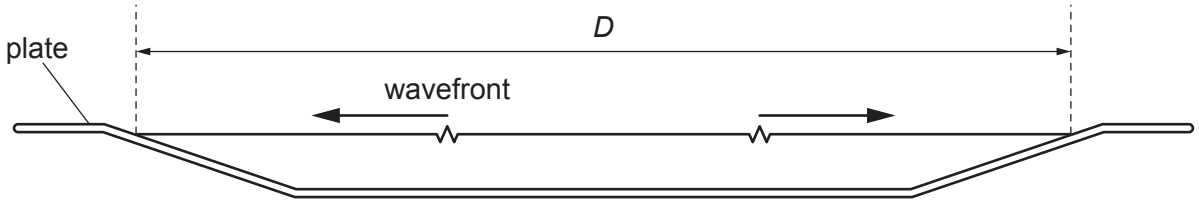

Fig. 1.3 (drawn to a scale of 1:2)

(i) The student uses a stop-watch to measure the time *t* taken for the wavefront to travel outwards from the centre of the plate and then back to the centre.

Fig. 1.4 shows three readings for time *t*.



Fig. 1.4

Use the stop-watch readings in Fig. 1.4 to determine an accurate value for *t*.

Show your working and give your answer to a suitable number of significant figures.

t = ... s [2]

(ii) The speed of the wavefront can be calculated using the equation:

$$\text{speed} = \frac{\text{distance}}{\text{time}}$$

Fig. 1.3 is drawn to a scale of 1:2. It is half the size of the plate used in the experiment.

Calculate the speed of the wavefront using your answer from **(b)(i)** and a measurement taken from Fig. 1.3.

speed = ... cm / s [2]

(c) (i) Identify **two** causes of uncertainty in this experiment.

1 .....

.....

.....

2 .....

.....

.....

[2]

(ii) Suggest **one** improvement that could be made to this experiment.

.....

.....

..... [1]

[Total: 10]

2 A student investigates the effect of two lenses on the size of a shadow.

He sets up the apparatus as shown in Fig. 2.1.

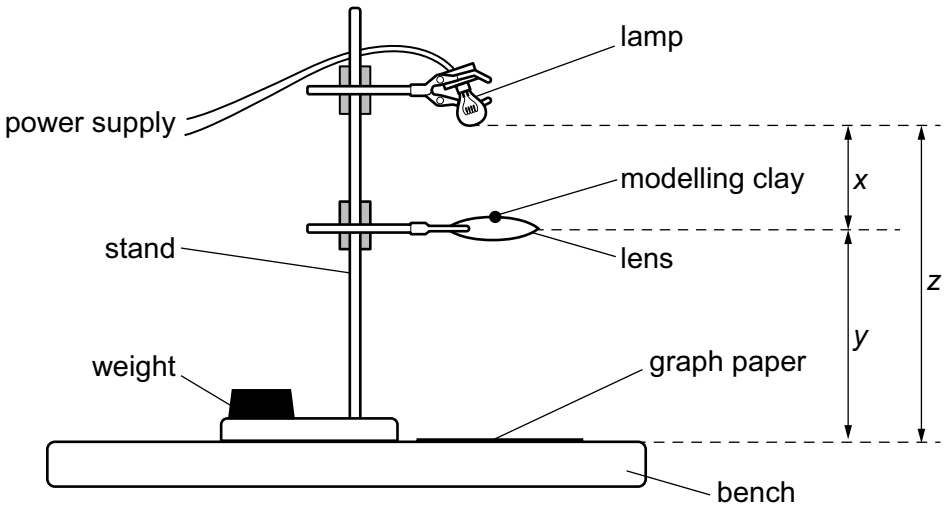

Fig. 2.1

The student uses a small lamp connected to a 3 V power supply.

He attaches the clamp holding the lamp to the highest position on the stand. In this position, the distance *z* between the lamp and the bench is 56.5 cm.

He places one of the glass lenses in the jaws of a clamp at a distance *x* = 20 cm below the lamp.

(a) Describe **two** precautions he takes to ensure the apparatus is set up safely.

1 .....

.....

.....

2 .....

.....

.....

[2]

(b) The student switches on the lamp. The lamp light and the modelling clay produce a shadow on the graph paper.

He holds a second lens under the lamp. When this lens is touching the lamp, the diameter *D* of the shadow of the modelling clay on the graph paper is 2 mm.

The student moves the second lens down towards the clamped lens. He observes the change in *D*. He records his observations as shown in Fig. 2.2.

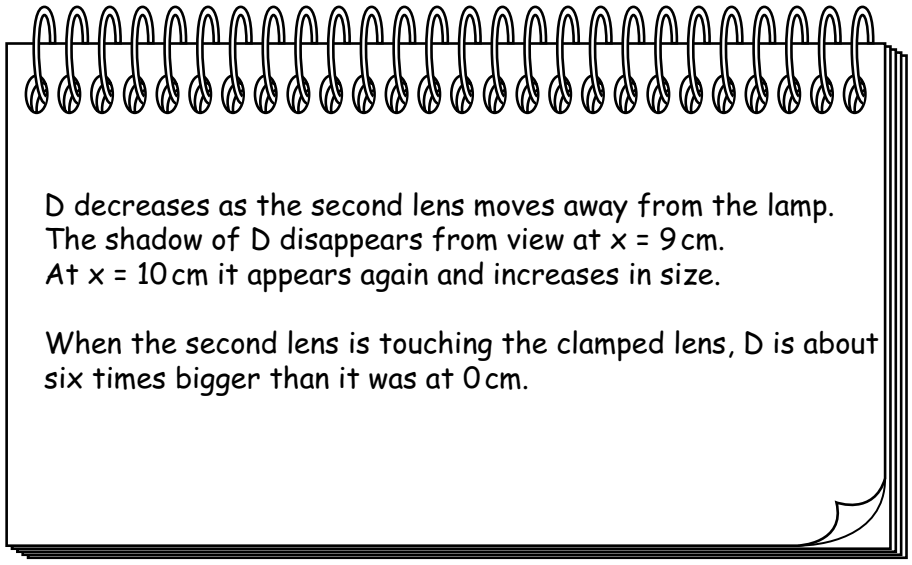

Fig. 2.2

Use the student's observations to sketch a graph on Fig. 2.3 showing how *D* changes with increasing *x*.

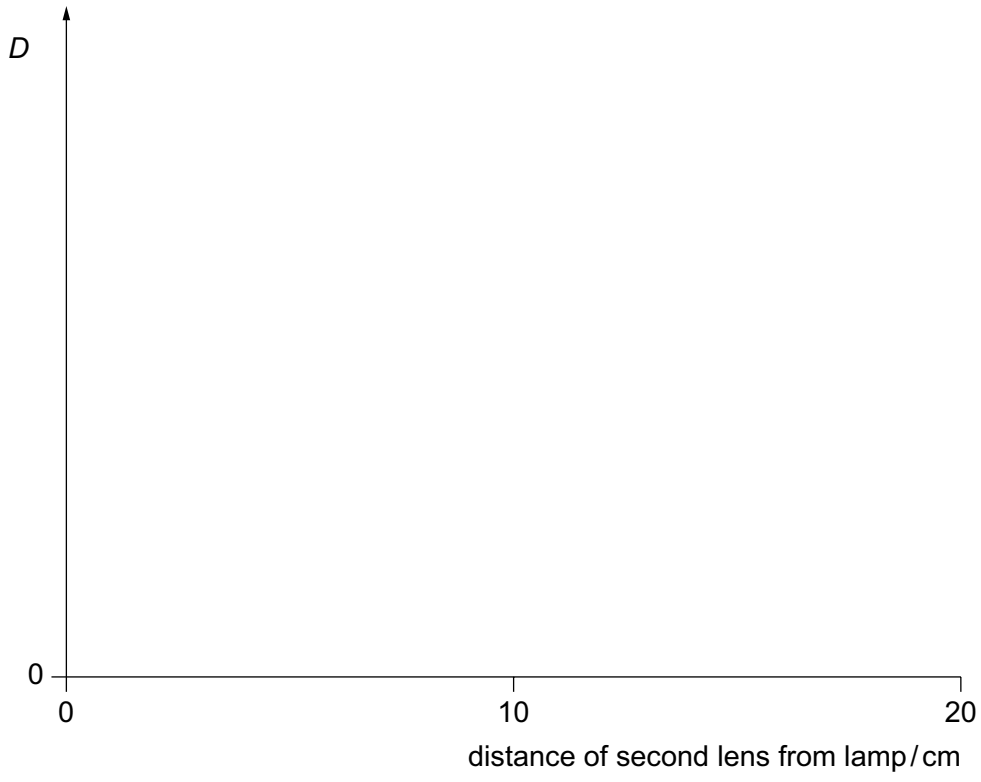

Fig. 2.3 [2]

(c) (i) The student removes the modelling clay from the clamped lens.

He keeps the lamp at the top of the stand. He can see an image of the lamp on the graph paper on the bench.

He adjusts the position of the clamped lens until the image is as small and bright as possible.

He finds that he **cannot** position the clamped lens so that the image seen on the graph paper is in focus.

The image is as small and bright as possible when x = 27.6 cm.

Calculate y.

y = ... cm [2]

(ii) A student suggests that the focal length f of the lens can be calculated by using the equation

$$f = \frac{xy}{x + y}$$

where x and y are determined for a focused image.

Calculate the value of f using this equation, where x = 27.6 cm and y is the value calculated in **(c)(i)**.

Show your working.

f = ... cm [2]

(d) (i) State why the arrangement of the apparatus shown in Fig. 2.1 **cannot** be used to accurately determine the focal length f.

.....

..... [1]

(ii) Suggest how the arrangement of the apparatus can be changed in order to **accurately** determine the focal length of the clamped lens.

.....

..... [1]

[Total: 10]

3 A student measures the focal length of a lens.

Fig. 3.1 shows the apparatus she uses and the position of the lens when a clearly focused image is formed on the screen.

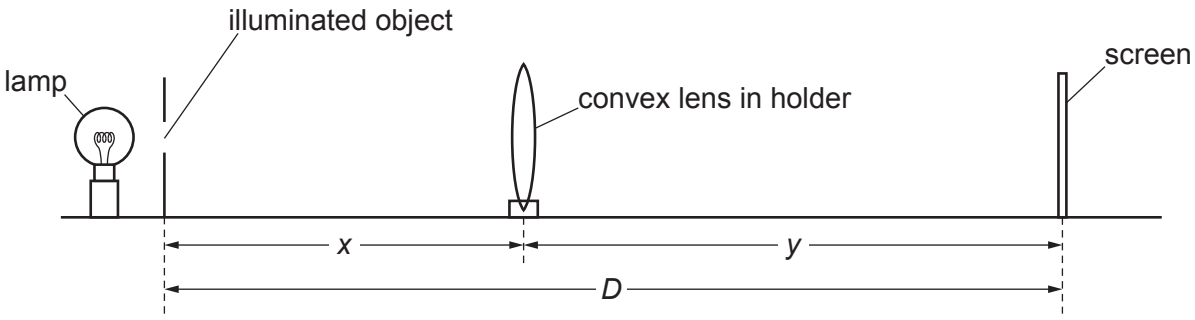

Fig. 3.1 (one fifth full size)

The student:

- places the screen a distance D = 60.0 cm from the illuminated object
- places the lens between the object and the screen so that the lens is very close to the illuminated object
- moves the lens slowly away from the illuminated object until a clearly focused image is formed on the screen.

(a) (i) Measure and record distance x on Fig. 3.1.

x = ... cm [1]

(ii) Fig. 3.1 is drawn to a scale of one fifth full size.

Use your answer to **(a)(i)** to calculate the actual object distance u from the lens.

u = ... cm [1]

(iii) Deduce the image distance v, the distance from the lens to the screen when a clear image is seen.

v = ... cm [1]

(b) Fig. 3.2 shows the shape of the illuminated object and Fig. 3.3 shows the image seen on the screen.

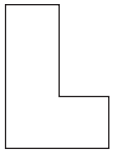

Fig. 3.2

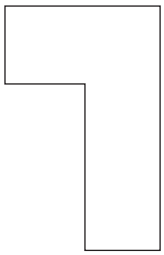

Fig. 3.3

Describe **two** differences between the illuminated object and its image on the screen.

1 .....

.....

2 .....

.....

[2]

(c) **(i)** The student moves the screen away from the illuminated object and repeats the procedure for values of D = 70.0 cm, 80.0 cm, 90.0 cm and 100.0 cm.

Table 3.1 shows the values recorded.

Add your values for u and v from **(a)(ii)** and **(a)(iii)** to Table 3.1 on page 12.

Complete Table 3.1 by calculating the value of ($u \times v$) for each value of D.
Give your answers to 3 significant figures.

Table 3.1

D / cm	u / cm	v / cm	$(u \times v)$ / cm^2
60.0			
70.0	21.0	49.0	
80.0	19.5	60.5	
90.0	18.6	71.4	
100.0	17.8	82.2	

[2]

(ii) Use the grid provided in Fig. 3.4 on page 13 to plot a graph of $(u \times v)$ / cm^2 on the y-axis against D / cm on the x-axis.

You do not need to start your axes at the origin (0,0).

Draw the straight line of best fit. [4]

(iii) The focal length f of the lens is numerically equal to the gradient of the line.

Calculate the gradient of the line. Show all working and indicate on your graph in Fig. 3.4 the values you use.

f = ... cm [2]

(d) The lens manufacturer states that the focal length of the lens is 15.0 cm ± 10%.

Decide, with a calculation, whether your value of f agrees with this statement and tick the box that shows your answer.

calculation:

☐ My value for f **agrees** with the manufacturer's statement.

☐ My value for f **does not agree** with the manufacturer's statement.

[1]

[Total: 14]

4. Question part 4/4 | 5054 May-June 2024 P4 V1 Q3

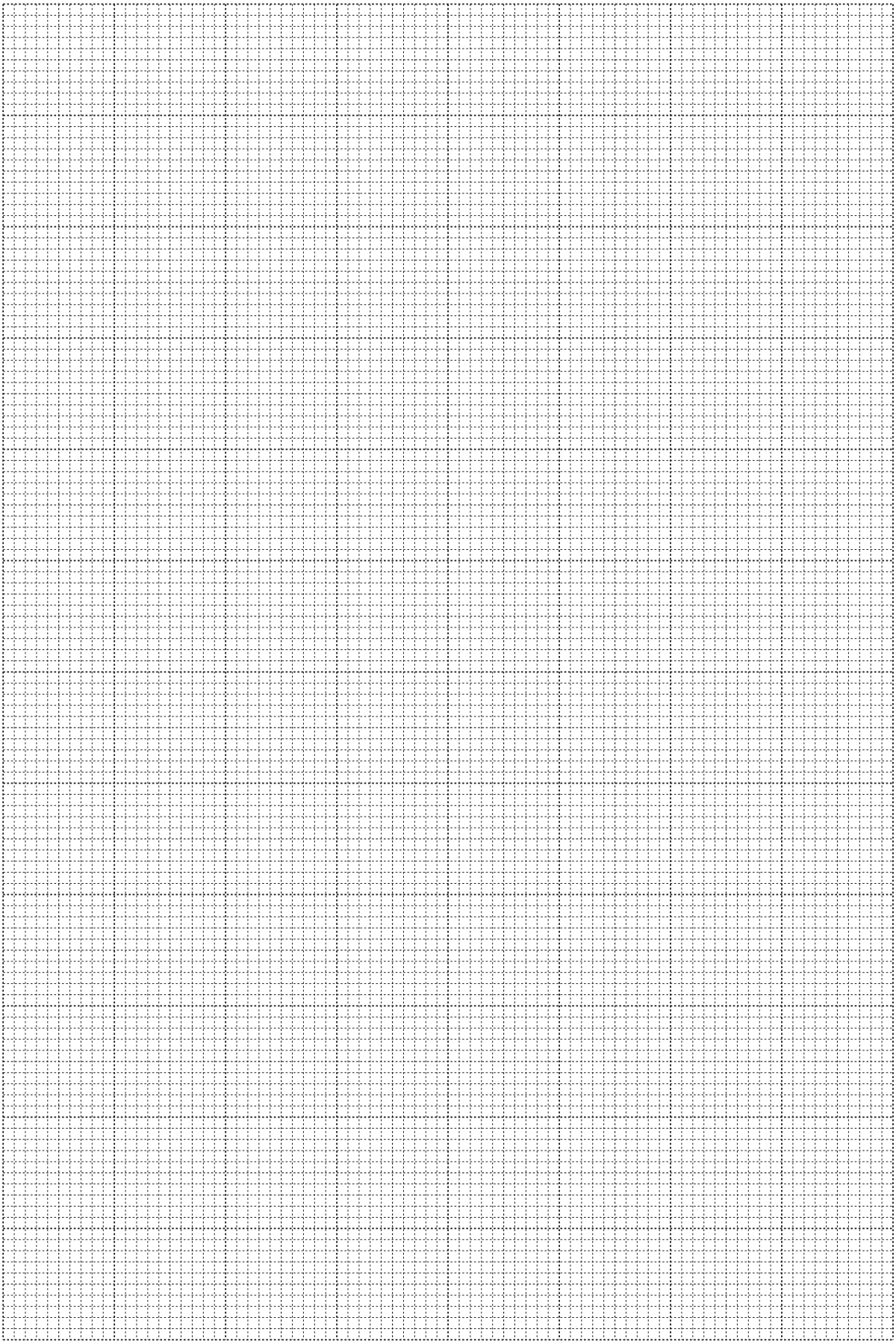

Fig. 3.4

4 A student has a converging (convex) lens and needs to determine its focal length.

Plan an experiment that will enable the student to measure an accurate value for the focal length *f* of the lens.

The focal length *f* of a lens can be calculated using the equation:

$$f = \frac{uv}{u + v}$$

where *u* is the distance between an object and the lens and *v* is the distance between the focussed image of the object and the lens.

Fig. 4.1 shows some of the apparatus available.

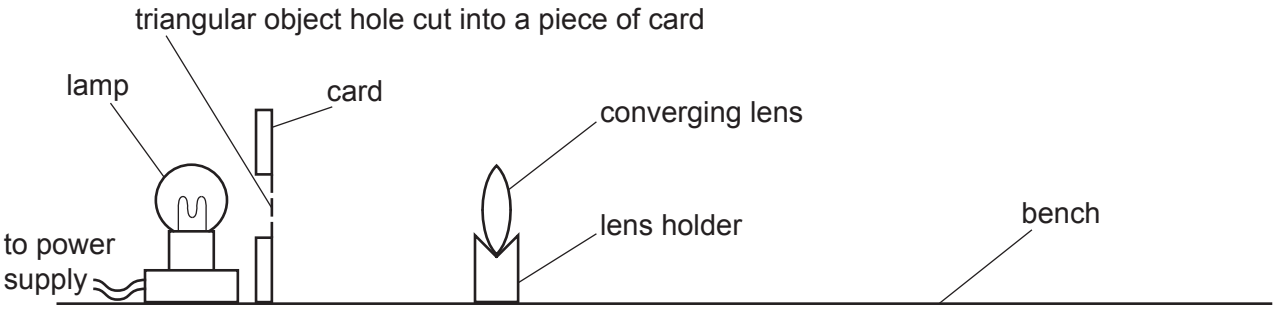

Fig. 4.1

The lamp is connected to a power supply and can be switched on and off as required.

Write a plan for the experiment.

In your plan you should:

- list any additional apparatus needed
- draw a diagram of the arrangement of the apparatus, labelling *u* and *v*
- explain briefly how to do the experiment
- state the steps taken to obtain a sharp, focussed image
- explain how to use your readings to determine *f*.

5. Question part 2/2 | 5054 May-June 2024 P4 V2 Q4

.....

.....

.....

3 A student investigates the image formed by a converging lens.

(a) The student:

- arranges the apparatus as shown in Fig. 3.1

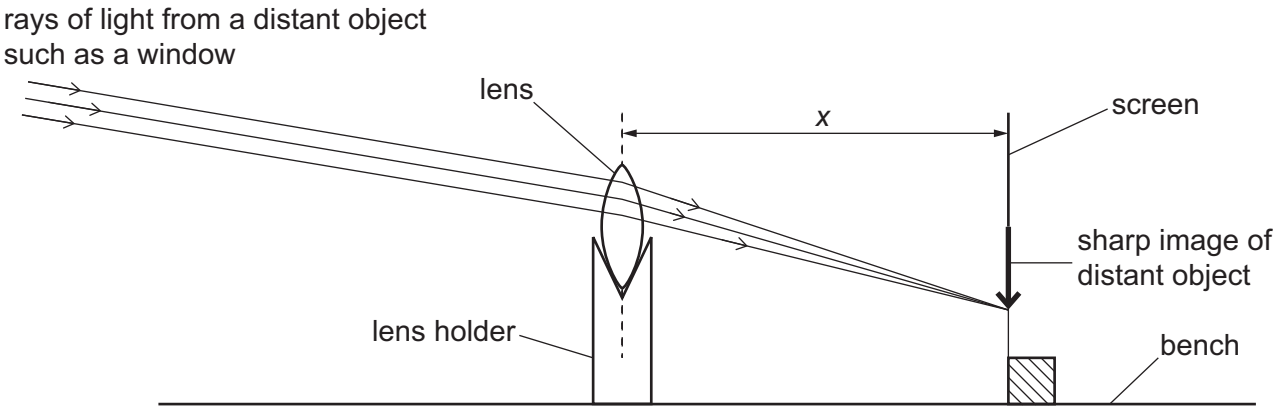

Fig. 3.1

- places a white screen approximately 30 cm from the lens
- adjusts the position of the screen until a sharp image of a window in the laboratory, a few metres distant from the lens, is formed on the screen.

(i) Measure and record, in centimetres to the nearest 0.1 cm, the distance *x* on Fig. 3.1 from the lens to the screen.

x = ... cm [1]

(ii) The distance *x* shown on Fig. 3.1 is drawn to a scale of one-third full size.

Use your answer from **(a)(i)** to calculate the actual distance from the lens to the screen.

This distance is the focal length *f* of the lens.

f = ... cm [1]

(b) The student:

- rearranges the apparatus as shown in Fig. 3.2

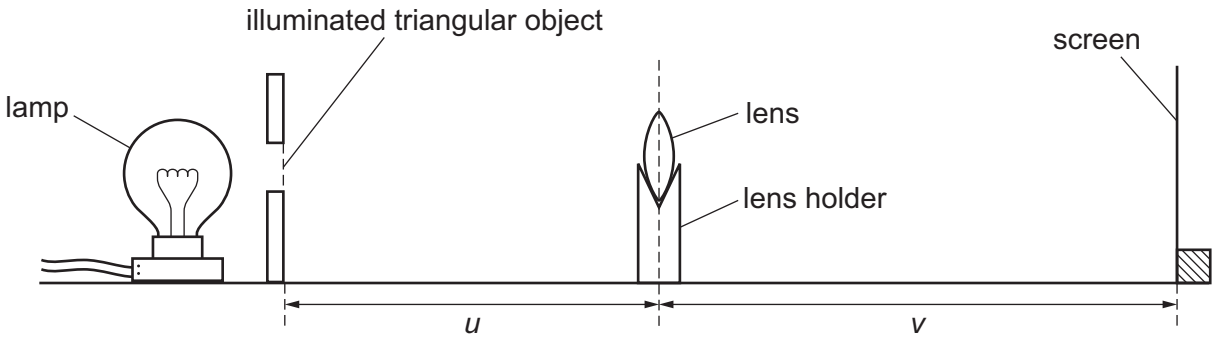

Fig. 3.2 (not to scale)

- switches on the lamp
- places the lens a distance u = 20.0 cm from an illuminated triangular object
- adjusts the position of the screen until a sharp image of the triangular object is formed on the screen
- measures the image distance v from the lens to the screen.

v = 60.5 cm

Calculate the values of (u + v) and uv.

Record your values of (u + v) and uv to an appropriate number of significant figures on the answer lines and in the first row of Table 3.1.

(u + v) = ...

uv = ...

[1]

(c) The student repeats **(b)** for values of u between u = 25.0 cm and u = 55.0 cm.

The student's results are shown in Table 3.1.

Add appropriate units to the headers of the last two columns. [1]

Table 3.1

u / cm	v / cm	(u + v) /	uv / .....
20.0	60.5	……..	……..
25.0	37.3	62	933
40.0	24.7	65	988
50.0	21.7	72	1090
55.0	20.7	76	1140

6. Question part 3/4 | 5054 Oct-Nov 2024 P4 V2 Q3

(d) On the grid provided in Fig. 3.3, plot a graph of uv on the y-axis against $(u + v)$ on the x-axis.

You do **not** need to start either axis from the origin (0, 0). Draw the straight line of best fit.

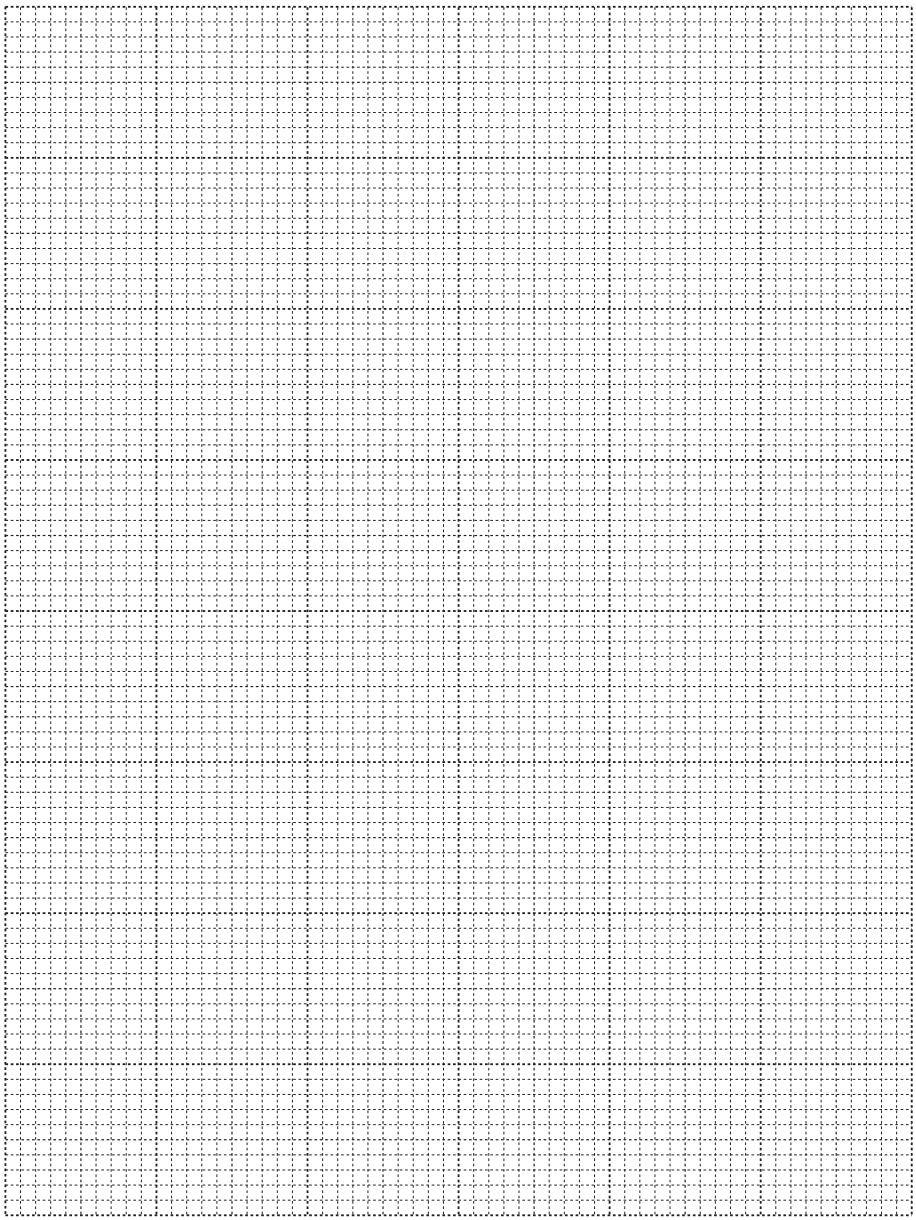

Fig. 3.3

[4]

(e) Calculate the gradient of the line.

Indicate on the graph the points you use.

Show all your working.

gradient = ... [2]

(f) Two quantities can be considered to be the same within the limits of experimental accuracy if their values are within 10% of each other.

The gradient of your line calculated in **(e)** is numerically equal to the focal length *f* of the lens in cm.

Compare your value of *f* obtained in **(a)(ii)** with the value of the gradient obtained in **(e)**.

State if your two values can be considered to be the same.

Support your statement with a calculation.

calculation

statement .....

..... [2]

(g) **(i)** When measuring the object and image distances with a metre rule, it is important to avoid line-of-sight (parallax) errors.

State how the student avoids parallax errors when doing the experiment.

.....

..... [1]

(ii) Describe a technique that the student uses to make sure that the image on the screen is as sharply focused as possible.

.....

.....

..... [1]

[Total: 14]

7. Question part 1/4 | 5054 May-June 2025 P4 V1 Q2

2 A student investigates the light reflected from a plane mirror.

(a) Fig. 2.1 shows a straight line AB.



Fig. 2.1

(i) Draw a line from point A at an angle of 30° in an anticlockwise direction from AB.

This line should be more than 10 cm long.

Label the end of the line as point C.

[1]

(ii) Mark a point D on the line AB, 4.0 cm from point A.

Draw a line perpendicular to AB **through** point D.

This line must also pass **through** the line AC that you have drawn in part **(a)(i)**.

Label, with an E, the point where the line through point D passes through AC.

[1]

7. Question part 2/4 | 5054 May-June 2025 P4 V1 Q2

(b) The student:

- places a plane mirror along the line AC with the reflective surface facing point B
- arranges an illuminated slit so that a ray of light passes along the line DE.

The ray reflects from the mirror.

(i) Draw a normal to line AC at point E. [1]

(ii) Label the angle between DE and the normal you have drawn with a θ.

Measure and record angle θ.

θ = ...° [1]

(iii) The student:

- marks two points P_1 and P_2 on the reflected line
- removes the mirror and draws the reflected line through points P_1 and P_2.

Describe how points P_1 and P_2 are chosen to give as accurate a reflected line as possible.

.....

..... [1]

7. Question part 3/4 | 5054 May-June 2025 P4 V1 Q2

(c) The student repeats the procedure with a ray of light striking the mirror at a different angle.

(i) Fig. 2.2 shows a second line, labelled A′B′.

On Fig. 2.2, draw a line from point A′ at an angle of 60° in an anticlockwise direction from line A′B′.

The line should be more than 10 cm long.

Label the end of the line with a C′. [1]



Fig 2.2

(ii) Mark a point D′ on the line A′B′, 4.0 cm from point A′.

Draw a line perpendicular to A′B′ **through** point D′.

This line must also pass **through** the line A′C′.

Label the point where the line through point D′ passes through A′C′ with an E′.

Draw a normal to line A′C′ at point E′. [1]

(iii) Label the angle between D′E′ and the normal you have drawn with an α.

Explain one practical precaution that you take to ensure that the normal is accurately drawn.

.....

..... [1]

(iv) Measure and record angle α.

α = ...° [1]

(d) Theory suggests that:

$$\alpha = 2\theta.$$

State whether your results support this theory.

Give a reason for your answer.

.....

.....

..... [1]

[Total: 10]

8. Question part 1/3 | 5054 May-June 2025 P4 V2 Q1

1 A student investigates the refraction of a ray of light passing through a transparent block and determines the refractive index *n* of the block.

The student's ray-trace sheet is shown full size in Fig. 1.1.

The outline of the transparent block is shown by the rectangle ABCD. A line SR that meets side AD of the block is also marked.

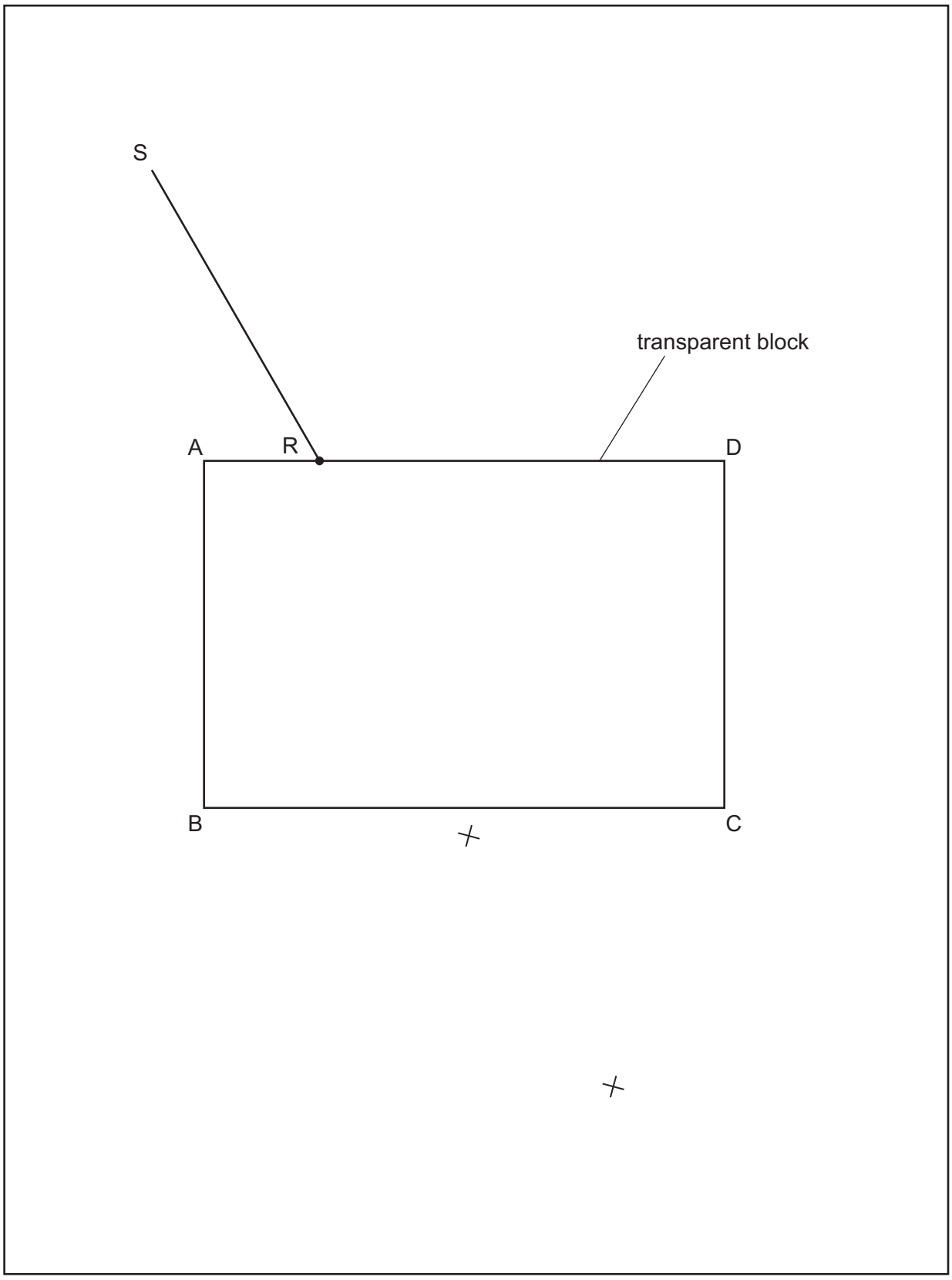

Fig. 1.1

8. Question part 2/3 | 5054 May-June 2025 P4 V2 Q1

(a) On Fig. 1.1, draw a normal to the block at the point R. Extend your normal 6 cm above side AD and below side BC.

Label the point where the normal crosses side BC of the block with the letter T.

Measure the angle θ between SR and the normal.

θ = ...° [1]

(b) The student:

- positions an illuminated slit on the ray-trace sheet so that a ray of light passes along the line SR towards R
- marks with small crosses (x) two points on the ray that leaves side BC of the block
- removes the transparent block.

On Fig. 1.1, draw a straight line through the two crosses to meet side BC of the block.

Label the point where this line meets side BC with the letter E.

Label the other end of this line as F.

Draw a straight line from E to R.

This shows the path of the ray of light through the block.

[1]

(c) **(i)** Measure the length *a* of line ET on Fig. 1.1.

a = ... cm [1]

(ii) Measure the length *b* of line ER on Fig. 1.1.

b = ... cm [1]

(d) On Fig. 1.1, extend the line FE into the block, until it meets the line RT.

Label the point where FE meets RT with the letter G.

Measure the length *c* of line EG on Fig. 1.1.

c = ... cm [1]

(e) **(i)** Use your values from **(c)(i)** and **(c)(ii)** to calculate a first value n_1 for the refractive index of the block.

Use the equation shown.

$$n_1 = \frac{b}{2a}$$

n_1 = ... [1]

(ii) Use your values from **(c)(ii)** and **(d)** to calculate a second value n_2 for the refractive index of the block.

Use the equation shown.

$$n_2 = \frac{b}{c}$$

n_2 = ... [1]

(f) Two quantities can be considered to be the same within the limits of experimental accuracy if their values are within 10% of each other.

Compare your value n_1 for the refractive index calculated in **(e)(i)** with the value n_2 calculated in **(e)(ii)**.

State if your two values can be considered to be the same.

Support your statement with a calculation.

calculation

statement .....
[2]

(g) One source of inaccuracy in this experiment is careless measurement.

Suggest **another** source of inaccuracy in this experiment.

.....

..... [1]

[Total: 10]

2 A student investigates the refraction of light through a transparent block.

(a) (i) Fig. 2.1 shows a top view of the transparent block.

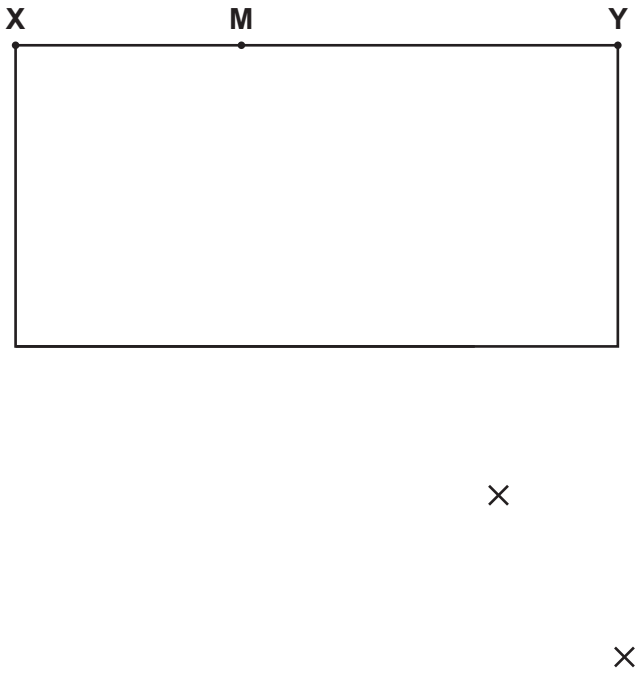

Fig. 2.1

On Fig. 2.1, draw a normal to the line **XY** at point **M** and extend it above and below the line **XY**. [1]

(ii) Draw a line from **M** at an angle of 40° to the normal to the left of the normal above line **XY** so that the angle between the drawn line and the normal is 40°. The 40° angle is the angle of incidence.

Label the top left-hand end of the line as point **L**. [1]

(b) (i) The student uses an illuminated slit to shine a narrow ray of light along the line **LM**.

The student marks the emerging ray with two crosses as shown in Fig. 2.1.

Join the marked crosses and extend the line to meet the lower end of the outline of the block. Label this as point **P**. [1]

(ii) Join the points **M** and **P** with a straight line. [1]

(iii) The angle of refraction r is the angle between the line **MP** and the normal drawn in **(a)(i)**.

Measure and record angle r.

r = ... ° [1]

(c) The refractive index n of the transparent block is given by the equation shown.

$$n = \frac{\sin 40°}{\sin r}$$

Calculate n and give your answer to 2 significant figures.

n = ... [2]

(d) Suggest how you could change the experiment to make sure that your value of n is accurate.

.....

.....

..... [1]

(e) Theory states that the angle between the emerging ray and the normal at the point that the ray emerges should be the same as the angle of incidence.

In **(a)(i)**, the angle of incidence is given as 40°.

Add another normal to your diagram.

Measure and record the angle α between the emerging ray and the normal.

α = ... °

Explain whether your measurements agree with this theory.

.....

.....

..... [2]

[Total: 10]