CAMBRIDGE
International Education

Cambridge O Level

CANDIDATE NAME

CENTRE NUMBER

CANDIDATE NUMBER

7942586208

PHYSICS **5054/22**

Paper 2 Theory **May/June 2026**

1 hour 45 minutes

You must answer on the question paper.

No additional materials are needed.

INSTRUCTIONS

- Answer **all** questions.
- Use a black or dark blue pen. You may use an HB pencil for any diagrams or graphs.
- Write your name, centre number and candidate number in the boxes at the top of the page.
- Write your answer to each question in the space provided.
- Do **not** use an erasable pen. Do **not** use correction fluid or tape.
- Do **not** write on any bar codes.
- You may use a calculator.
- You should show all your working and use appropriate units.
- Take the weight of 1.0 kg to be 9.8 N (acceleration of free fall = 9.8 m / s^2).

INFORMATION

- The total mark for this paper is 80.
- The number of marks for each question or part question is shown in brackets [ ].

This document has **20** pages. Any blank pages are indicated.

© Cambridge University Press & Assessment 2026

1 An athlete and a cyclist both travel along the same straight road in the same direction.

- The athlete and the cyclist start next to each other at time $t = 0$.
- The athlete runs at a steady speed of 8.0 m / s from $t = 0$ to $t = 6.0$ s.
- The cyclist accelerates uniformly from rest at $t = 0$ to a speed of 18 m / s at $t = 6.0$ s.

(a) On Figure 1.1, draw speed–time graphs for the runner and for the cyclist.

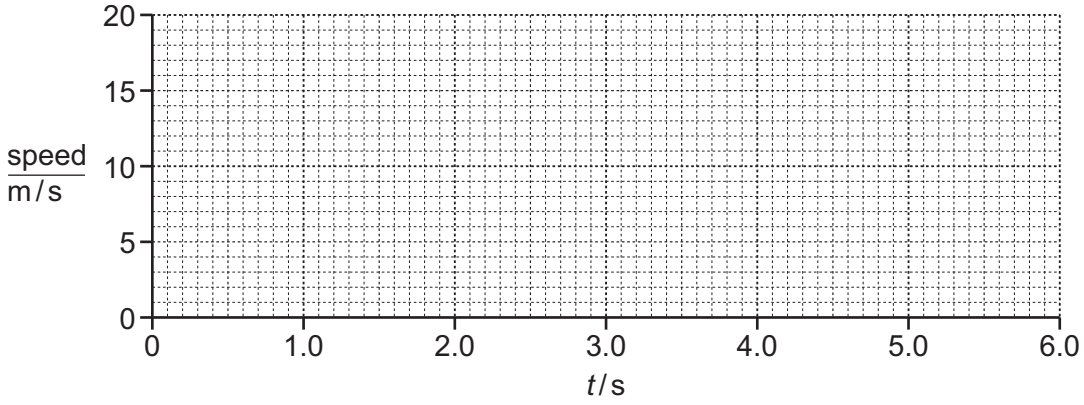

Figure 1.1

[2]

(b) Calculate the acceleration of the cyclist. Give the unit of your answer.

acceleration = ... unit ..... [3]

(c) Show, by calculation, that the athlete has travelled a greater distance than the cyclist at $t = 5.0$ s.

[2]

DO NOT WRITE IN THIS MARGIN

(d) State Newton's first law of motion, and explain how it applies to the motion of the athlete.

.....

.....

.....

..... [2]

[Total: 9]

DO NOT WRITE IN THIS MARGIN
DO NOT WRITE IN THIS MARGIN
DO NOT WRITE IN THIS MARGIN
DO NOT WRITE IN THIS MARGIN
DO NOT WRITE IN THIS MARGIN

2 A heavy stone is placed on a plank of wood to make a diving board as shown in Figure 2.1.

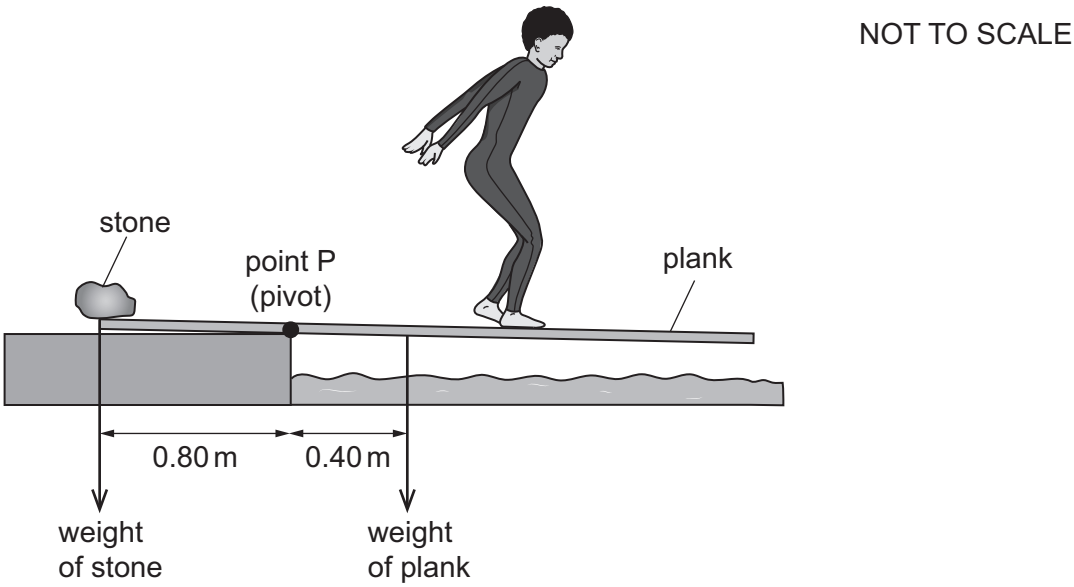

Figure 2.1

The point P is a pivot.

The weight of the stone is 650 N, and the weight of the plank is 200 N.

(a) State the principle of moments.

.....

.....

..... [2]

(b) Calculate the moment of the weight of the plank about P.

moment = ... N m [2]

DO NOT WRITE IN THIS MARGIN
DO NOT WRITE IN THIS MARGIN
DO NOT WRITE IN THIS MARGIN
DO NOT WRITE IN THIS MARGIN
DO NOT WRITE IN THIS MARGIN

(c) A student of mass 40 kg walks to the right along the plank until the plank tips into the water.

Calculate the horizontal distance between point P and the student when the plank tips into the water.

distance = ... m [3]

[Total: 7]

DO NOT WRITE IN THIS MARGIN
DO NOT WRITE IN THIS MARGIN
DO NOT WRITE IN THIS MARGIN
DO NOT WRITE IN THIS MARGIN
DO NOT WRITE IN THIS MARGIN

3 Figure 3.1 shows a dam used as part of a hydroelectric power station.

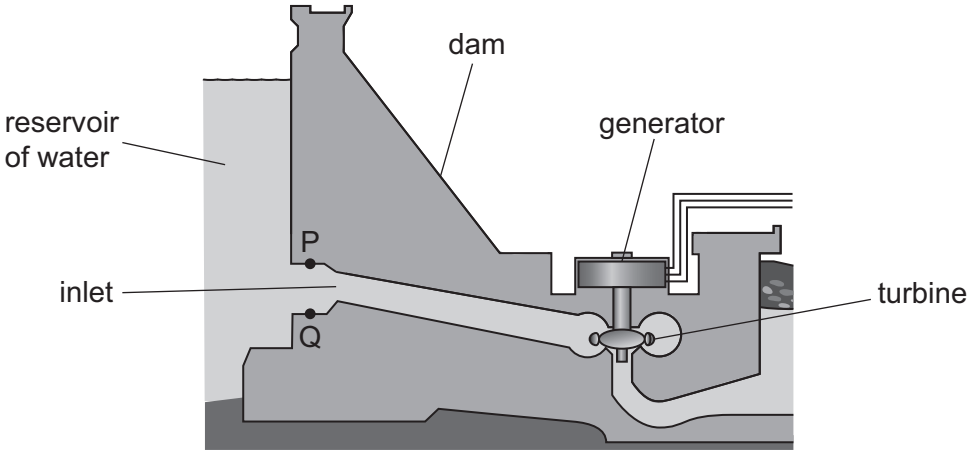

Figure 3. 1

Water flows to the turbine through an inlet in the dam. The inlet is shown in Figure 3.1.

Points P and Q are on the horizontal surfaces next to the inlet.

(a) (i) State **two** factors that determine the size of the pressure at P.

.....

..... [1]

(ii) The pressure in the water causes a force on the horizontal surfaces at P and Q.

State the directions of the forces due to the water on the surfaces at P and Q.

direction at P .....

direction at Q .....

[1]

(b) This hydroelectric energy resource is a renewable source of energy.

State the name of **one** other renewable energy source.

..... [1]

DO NOT WRITE IN THIS MARGIN

(c) The power output from the generator is 2.5 MW.

(i) Calculate the energy **output** from the generator in 30 minutes.

energy output = ... J [2]

(ii) The efficiency of the energy transfer in the generator is 95%.

Calculate the power **input** to the generator.

power input = ... MW [2]

[Total: 7]

DO NOT WRITE IN THIS MARGIN
DO NOT WRITE IN THIS MARGIN
DO NOT WRITE IN THIS MARGIN
DO NOT WRITE IN THIS MARGIN
DO NOT WRITE IN THIS MARGIN

4 Figure 4.1 shows a travel mug used to keep a liquid hot.

Inside the mug, there are metal walls with a vacuum between the walls.

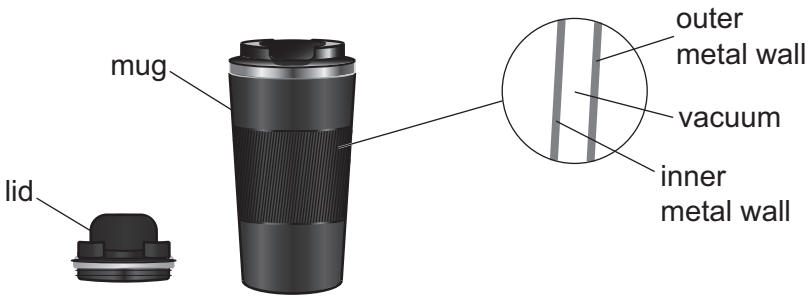

Figure 4.1

The mug contains 250 g of water, initially at 90 °C. Over 6.0 hours, the water cools to 75 °C.

The specific heat capacity of water is 4.2 J / (g °C).

(a) State what is meant by 'specific heat capacity'.

.....

..... [2]

(b) Calculate the thermal energy transferred from the water over 6.0 hours.

thermal energy = ... J [2]

(c) (i) Explain how the vacuum between the walls reduces the transfer of thermal energy.

.....

.....

..... [2]

(ii) Suggest and explain the best colour and texture for the surface of the walls.

.....

.....

..... [2]

DO NOT WRITE IN THIS MARGIN

(d) Explain why the water cools faster when the lid is removed.

.....

.....

.....

.....

..... [2]

[Total: 10]

DO NOT WRITE IN THIS MARGIN
DO NOT WRITE IN THIS MARGIN
DO NOT WRITE IN THIS MARGIN
DO NOT WRITE IN THIS MARGIN
DO NOT WRITE IN THIS MARGIN

5 A student uses a glass block and two identical glass prisms to demonstrate the action of a converging lens.

Figure 5.1 shows three parallel rays of red light incident on the glass block and the two prisms.

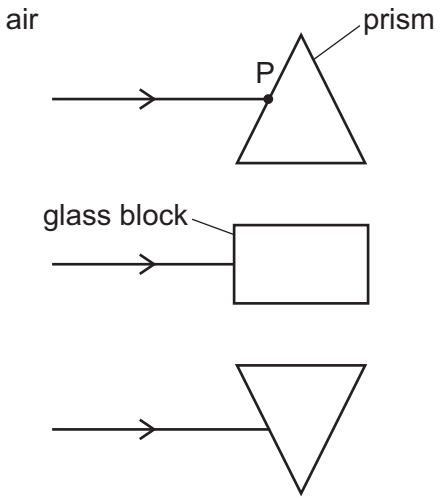

Figure 5.1

(a) (i) On Figure 5.1, draw and label the normal to the prism at point P. [1]

(ii) Complete Figure 5.1 to show how the rays of light travel through and out of both prisms and the glass block. [2]

(iii) The action of a diverging lens is also demonstrated using the two identical glass prisms and the glass block.

On Figure 5.2, draw the prisms arranged so that they demonstrate the action of a diverging lens.

Show the rays of light travelling through the prisms and the glass block.

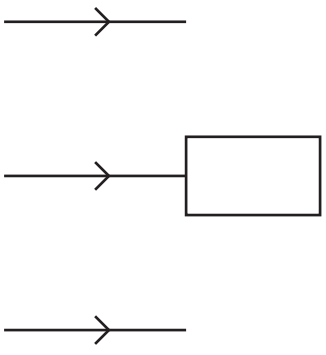

Figure 5.2

[2]

© Cambridge University Press & Assessment 2026

DO NOT WRITE IN THIS MARGIN
DO NOT WRITE IN THIS MARGIN
DO NOT WRITE IN THIS MARGIN
DO NOT WRITE IN THIS MARGIN
DO NOT WRITE IN THIS MARGIN

(b) Figure 5.3 shows a converging lens, an object and two rays of light from the top of the object. The principal focus (focal point) on each side of the lens is labelled F.

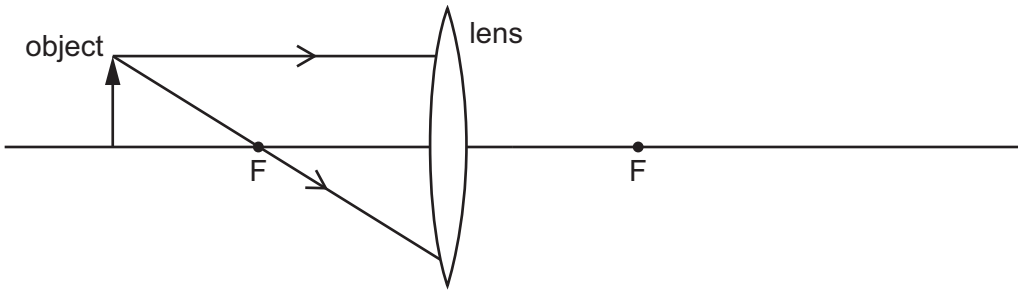

Figure 5.3

Continue the paths of both rays to show where the image of the object is formed. Draw and label the image. [2]

(c) Figure 5.4 shows the electromagnetic spectrum.

radio waves	microwaves	infrared	visible light	ultraviolet	X-rays	gamma rays

Figure 5.4

State **two** properties of electromagnetic waves that change from one end of the spectrum to the other end, and describe how these properties change from one end to the other.

1 .....

.....

2 .....

.....

[2]

[Total: 9]

DO NOT WRITE IN THIS MARGIN
DO NOT WRITE IN THIS MARGIN
DO NOT WRITE IN THIS MARGIN
DO NOT WRITE IN THIS MARGIN
DO NOT WRITE IN THIS MARGIN

6 Figure 6.1 shows a light-dependent resistor (LDR) connected in series with a fixed resistor of resistance 200 Ω and a battery.

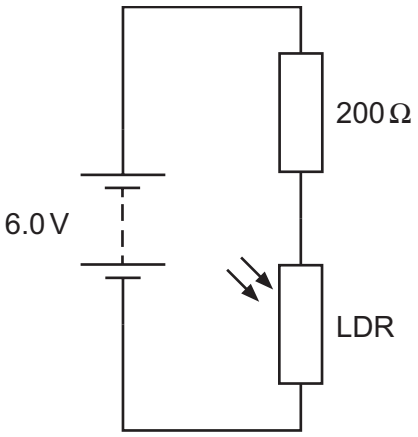

Figure 6.1

The electromotive force (e.m.f.) of the battery is 6.0 V.

The potential difference (p.d.) across the LDR is 2.4 V.

(a) Both e.m.f. and p.d. are measured in volts.

The definitions of e.m.f. and p.d both involve the work done per unit charge.

State how the definitions of e.m.f. and p.d are **different** from each other.

.....

.....

.....

..... [2]

(b) (i) State the equation that relates resistance, current and voltage.

..... [1]

(ii) Compare the current in the fixed resistor with the current in the LDR.

..... [1]

DO NOT WRITE IN THIS MARGIN
DO NOT WRITE IN THIS MARGIN
DO NOT WRITE IN THIS MARGIN
DO NOT WRITE IN THIS MARGIN
DO NOT WRITE IN THIS MARGIN

(c) Calculate:

(i) the p.d. across the fixed resistor

p.d. = ...V [1]

(ii) the resistance of the LDR.

resistance = ... Ω [2]

(d) The brightness of the light shining on the LDR increases.

Using words or phrases from the list below, complete Table 6.1 to show the effect of this increase in brightness.

You may use each word or phrase once, more than once or not all.

increases **stays the same** **decreases**

Table 6.1

	effect of increase in brightness
resistance of LDR	.....
current in LDR	.....
current in fixed resistor	.....
p.d. across the fixed resistor	.....
p.d. across the LDR	.....

[3]

[Total: 10]

DO NOT WRITE IN THIS MARGIN

7 **(a)** A solenoid is wound through holes in a piece of cardboard. There is a current in the solenoid.

Figure 7.1 shows the arrangement.

The direction of the current is shown by the arrows.

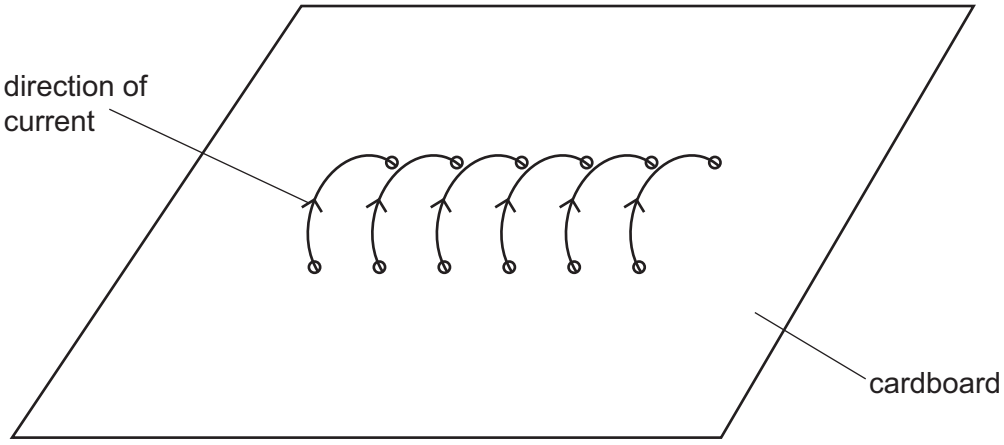

Figure 7.1

(i) The current in the solenoid creates a magnetic field in and around the solenoid.

On Figure 7.1, draw the arrangement of the magnetic field lines on the surface of the cardboard.

Mark the direction of the magnetic field on the lines. [3]

(ii) The current in the solenoid increases.

State how the arrangement of the magnetic field lines in Figure 7.1 changes.

.....

..... [1]

DO NOT WRITE IN THIS MARGIN
DO NOT WRITE IN THIS MARGIN
DO NOT WRITE IN THIS MARGIN
DO NOT WRITE IN THIS MARGIN
DO NOT WRITE IN THIS MARGIN

(b) Another solenoid is wrapped around a plastic tube.

A coil connected to a lamp is wrapped loosely around the other end of the tube as shown in Figure 7.2.

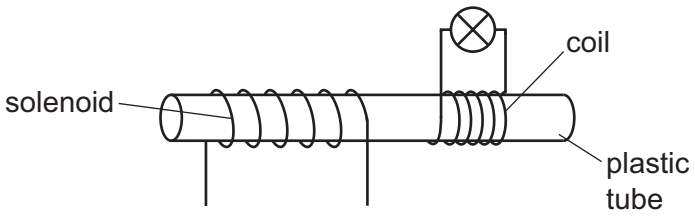

Figure 7.2

A direct current (d.c.) supply is connected to the solenoid and switched on.

There is a brief pulse of current in the coil as the d.c. supply is switched on.

The lamp emits a brief flash of light, and the coil moves slightly to the right, away from the solenoid.

(i) Explain why a current is produced in the coil when the d.c. supply is switched on.

.....

.....

..... [2]

(ii) State **one** way in which the size of the current produced in the coil can be increased.

..... [1]

(iii) Explain why the coil moves away from the solenoid when the d.c. supply is first switched on.

.....

.....

.....

.....

..... [2]

[Total: 9]

DO NOT WRITE IN THIS MARGIN
DO NOT WRITE IN THIS MARGIN
DO NOT WRITE IN THIS MARGIN
DO NOT WRITE IN THIS MARGIN
DO NOT WRITE IN THIS MARGIN

8 The isotope iodine-131 is used in the treatment of cancer.

During treatment, iodine-131 is absorbed by the cancer cells. Beta particles emitted from iodine-131 destroy the cancer cells.

(a) Iodine-131 is more suitable for the treatment of cancer than a radioactive source which emits only gamma radiation.

Explain **two** properties of beta particles that make iodine-131 the more suitable source.

1 .....

.....

2 .....

.....

[2]

(b) Figure 8.1 shows the apparatus used by a scientist to measure the half-life of a radioactive isotope.

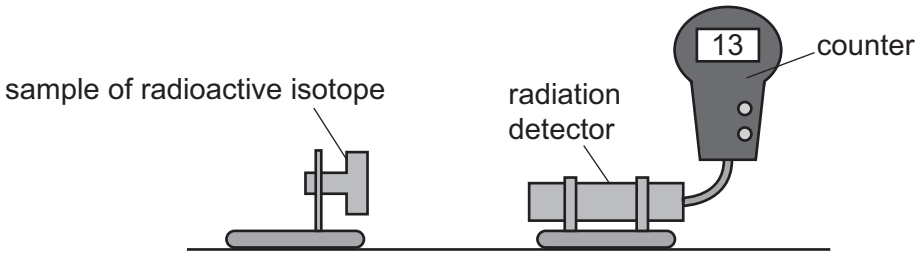

Figure 8.1

The scientist first measures the background radiation without the sample of radioactive isotope present.

The counter is set to zero, and the counter and radiation detector then used to record the background count for one minute. The procedure is repeated twice.

The scientist's results are shown in Table 8.1.

Table 8.1

background count in one minute	8	13	9

(i) State the name of a suitable radiation detector to use with the counter.

..... [1]

DO NOT WRITE IN THIS MARGIN

(ii) The apparatus is not moved between the readings.

State why the three readings in Table 8.1 are different.

.....

..... [1]

(iii) Calculate the average background count rate.

background count rate = ...counts / min [1]

(iv) The measured count rate *C* from the sample includes the background count rate.

The initial value of *C* is 90 counts / min.

Calculate the value of *C* after one half-life.

C = ... counts / min [2]

(c) A doctor has the choice of either using iodine-131 with a half-life of 8.0 days or an isotope with a half-life of 8.0 years for the treatment of a cancer. The isotope is also a beta-particle emitter.

Suggest why iodine-131 is the better isotope to use.

.....

..... [1]

(d) When emitting a beta particle, a nucleus of iodine-131 changes to a nucleus of xenon-131.

Describe how a nucleus of xenon-131 differs from a nucleus of iodine-131.

.....

.....

..... [2]

[Total:10]

© Cambridge University Press & Assessment 2026

DO NOT WRITE IN THIS MARGIN
DO NOT WRITE IN THIS MARGIN
DO NOT WRITE IN THIS MARGIN
DO NOT WRITE IN THIS MARGIN
DO NOT WRITE IN THIS MARGIN

9 Figure 9.1 shows the Sun and the orbits of three planets in the Solar System.

NOT TO SCALE

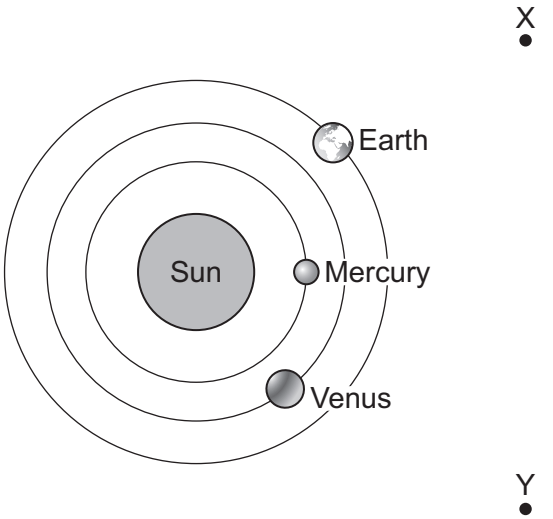

Figure 9.1

Halley's comet orbits around the Sun.

The orbit of Halley's comet passes through points X and Y and is closest to the Sun between the orbits of Mercury and Venus.

(a) On Figure 9.1 draw the orbit of Halley's comet. [1]

(b) State **two** reasons why Mercury takes a shorter time to orbit the Sun than Earth.

.....

.....

.....

..... [2]

DO NOT WRITE IN THIS MARGIN

DO NOT WRITE IN THIS MARGIN
DO NOT WRITE IN THIS MARGIN
DO NOT WRITE IN THIS MARGIN
DO NOT WRITE IN THIS MARGIN
DO NOT WRITE IN THIS MARGIN

(c) The Sun is a stable star.

(i) State the name of the process that causes the release of energy in the Sun.

..... [1]

(ii) Explain, using ideas about forces, why the Sun is stable.

.....

.....

.....

..... [2]

(iii) Describe what will happen to the Sun when it stops being a stable star.

.....

.....

.....

.....

..... [3]

[Total: 9]



BLANK PAGE

DO NOT WRITE IN THIS MARGIN
DO NOT WRITE IN THIS MARGIN
DO NOT WRITE IN THIS MARGIN
DO NOT WRITE IN THIS MARGIN
DO NOT WRITE IN THIS MARGIN

Permission to reproduce items where third-party owned material protected by copyright is included has been sought and cleared where possible. Every reasonable effort has been made by the publisher (Cambridge University Press & Assessment) to trace copyright holders, but if any items requiring clearance have unwittingly been included, the publisher will be pleased to make amends at the earliest possible opportunity.

To avoid the issue of disclosure of answer-related information to candidates, all copyright acknowledgements are reproduced online in our Copyright Acknowledgements Booklet. This is produced for each series of examinations and is freely available to download at www.cambridgeinternational.org after the live examination series.

Cambridge International Education is the name of our awarding body and a part of Cambridge University Press & Assessment, which is a department of the University of Cambridge.

© Cambridge University Press & Assessment 2026

