CAMBRIDGE
International Education

Cambridge O Level

CANDIDATE NAME

CENTRE NUMBER

CANDIDATE NUMBER

9693877843

PHYSICS **5054/41**

Paper 4 Alternative to Practical **May/June 2026**

1 hour

You must answer on the question paper.

No additional materials are needed.

INSTRUCTIONS

- Answer **all** questions.
- Use a black or dark blue pen. You may use an HB pencil for any diagrams or graphs.
- Write your name, centre number and candidate number in the boxes at the top of the page.
- Write your answer to each question in the space provided.
- Do **not** use an erasable pen. Do **not** use correction fluid or tape.
- Do **not** write on any bar codes.
- You may use a calculator.
- You should show all your working and use appropriate units.

INFORMATION

- The total mark for this paper is 40.
- The number of marks for each question or part question is shown in brackets [ ].

This document has **16** pages. Any blank pages are indicated.

© Cambridge University Press & Assessment 2026

1 A student measures the density of modelling clay.

(a) Figure 1.1 represents a piece of modelling clay in the shape of a cylinder of length l. Two points, A and B, are marked on the modelling clay as shown in Figure 1.1.

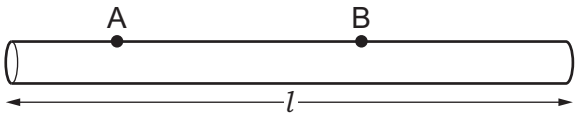

Figure 1.1

(i) Measure length l in cm to the nearest mm.

l = ... cm [1]

(ii) Figure 1.1 is drawn to one-half full size.

Calculate the actual length L of the cylinder.

L = ... cm [1]

(iii) Two blocks are placed around the cylinder of modelling clay so that point A is between them as shown in Figure 1.2.

The distance d_1 between the two blocks is the diameter of the modelling clay at point A.

Figure 1.2 is drawn full size.

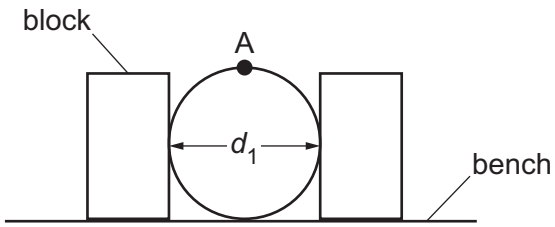

Figure 1.2

Measure d_1 in cm to the nearest mm.

d_1 = ... cm [1]

DO NOT WRITE IN THIS MARGIN

(iv) The blocks are moved so that point B on the modelling clay is between them.

Figure 1.3 shows the modelling clay in the new position.

Figure 1.3 is shown full size.

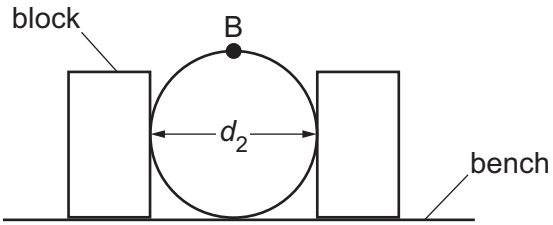

Figure 1.3

Measure d_2 in cm to the nearest mm.

d_2 = ... cm [1]

(v) The average diameter d of the modelling clay is given by the equation shown.

$$d = \frac{d_1 + d_2}{2}$$

Use your values from **1(a)(iii)** and **1(a)(iv)** to find d. Give your answer in cm to the nearest mm.

d = ... cm [1]

(b) The cylinder is placed on a top pan balance as shown in Figure 1.4.

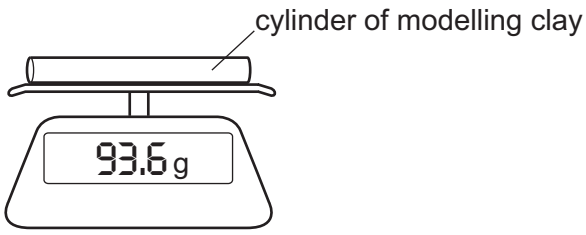

Figure 1.4

Record the mass m of the modelling clay to the nearest gram.

m = ... g [1]

DO NOT WRITE IN THIS MARGIN
DO NOT WRITE IN THIS MARGIN
DO NOT WRITE IN THIS MARGIN
DO NOT WRITE IN THIS MARGIN
DO NOT WRITE IN THIS MARGIN

(c) The density of the modelling clay is calculated using the equation shown.

$$\text{density} = 1.27 \times \frac{m}{d^2 L}$$

Use your answers in **1(a)(ii)**, **1(a)(v)** and **1(b)** to calculate the density of the modelling clay.

Give your answer to three significant figures, and state the unit of your answer.

density = ... unit ..... [3]

(d) Suggest why it is important to take measurements of the diameter at more than one place along the length of the cylinder.

.....

..... [1]

[Total: 10]

DO NOT WRITE IN THIS MARGIN
DO NOT WRITE IN THIS MARGIN
DO NOT WRITE IN THIS MARGIN
DO NOT WRITE IN THIS MARGIN
DO NOT WRITE IN THIS MARGIN

© Cambridge University Press & Assessment 2026

2 A student investigates the resistance of a thermistor.

(a) Some of the apparatus used is shown in Figure 2.1.

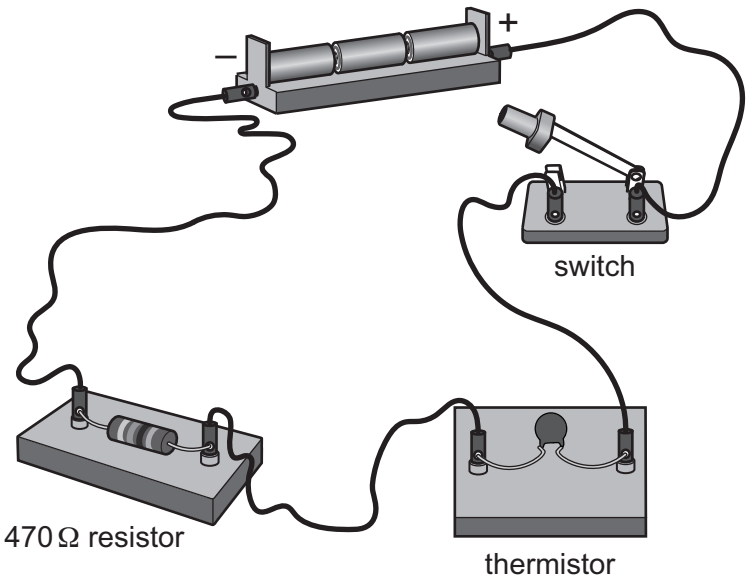

Figure 2.1

(i) Draw a diagram of the circuit shown in Figure 2.1, using standard electrical symbols.

[2]

(ii) Add a voltmeter to the circuit diagram you have drawn to measure the potential difference across the 470 Ω resistor. [1]

DO NOT WRITE IN THIS MARGIN

(iii) The switch is closed.

Figure 2.2 shows the reading on the voltmeter.

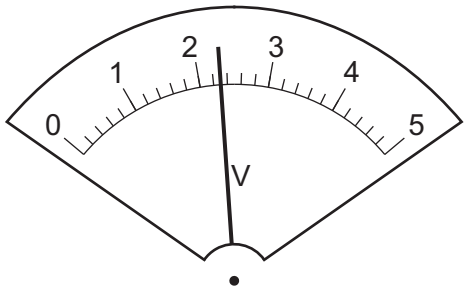

Figure 2.2

Record the potential difference V_R across the fixed resistor.

V_R = ... V [1]

(iv) The student:

- opens the switch
- disconnects the voltmeter from across the fixed resistor
- connects the voltmeter across the thermistor
- closes the switch and reads the voltmeter
- opens the switch.

The potential difference V_T across the thermistor is recorded as 2.2 V.

The resistance R_T of the thermistor is calculated using the equation shown.

$$R_T = \frac{470 \times V_T}{V_R}$$

Calculate R_T.

R_T = ... Ω [1]

(v) Calculate the current I in the circuit using the equation shown.

$$I = \frac{V_R + V_T}{470 + R_T}$$

I = ...A [1]

DO NOT WRITE IN THIS MARGIN
DO NOT WRITE IN THIS MARGIN
DO NOT WRITE IN THIS MARGIN
DO NOT WRITE IN THIS MARGIN
DO NOT WRITE IN THIS MARGIN

(b) The thermistor is now immersed in a beaker of iced water as shown in Figure 2.3.

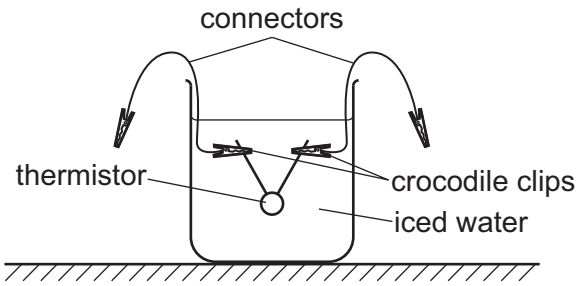

Figure 2.3

(i) The student measures V_R and V_T with the thermistor immersed in the beaker of iced water. The new values for V_R and V_T are shown.

$V_R = 1.7\,V$
$V_T = 2.8\,V$

Using the equation in **2(a)(iv)**, calculate the resistance R_T of the thermistor when the thermistor is immersed in iced water.

$R_T =$ ..... Ω [1]

(ii) Describe how the resistance of the thermistor changes as its temperature changes.

.....

..... [1]

(iii) A student says that the current in the circuit when the thermistor is in iced water is the same as the current in the circuit when the thermistor is at room temperature.

State why this is incorrect by referring to the equation $V = IR$.

.....

..... [1]

(iv) Suggest a possible value for the resistance of the thermistor when it is placed in water heated to 50 °C.

.....

..... [1]

[Total: 10]

© Cambridge University Press & Assessment 2026

DO NOT WRITE IN THIS MARGIN
DO NOT WRITE IN THIS MARGIN
DO NOT WRITE IN THIS MARGIN
DO NOT WRITE IN THIS MARGIN
DO NOT WRITE IN THIS MARGIN

3 A student investigates the effect of aluminium foil on the rate of cooling of a beaker of water.

(a) (i) The student places a thermometer in a clamp as shown in Figure 3.1.

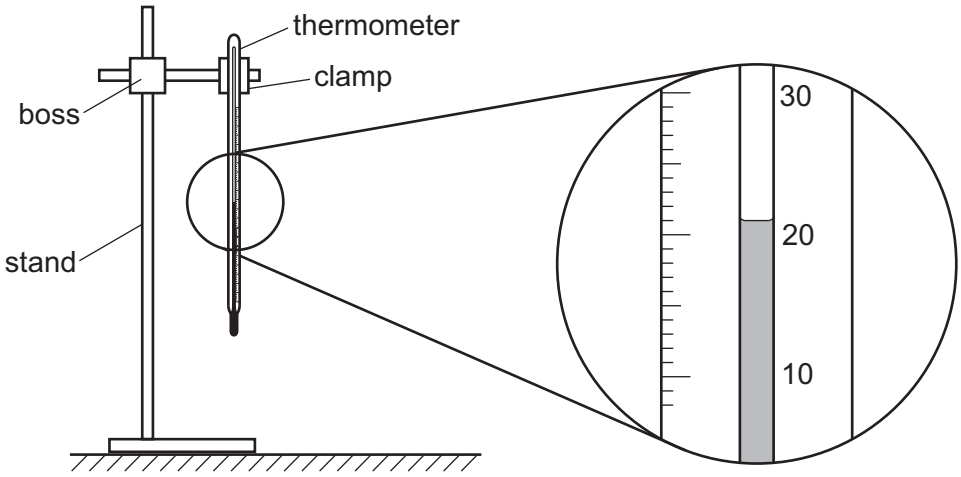

Figure 3.1

Record the temperature on the thermometer to the nearest 0.5 °C. This is room temperature θ_R.

θ_R = ... °C [1]

(ii) Explain how the student avoids parallax error when reading the room temperature from the thermometer scale.

.....

..... [1]

DO NOT WRITE IN THIS MARGIN

(b) procedure

The student:

- places the glass beaker below the thermometer
- lowers the thermometer so that the bulb is in the middle of the beaker as shown in Figure 3.2
- adds 100 cm^3 of hot water to the beaker
- waits for the thermometer to reach its maximum value and then starts the stopwatch.

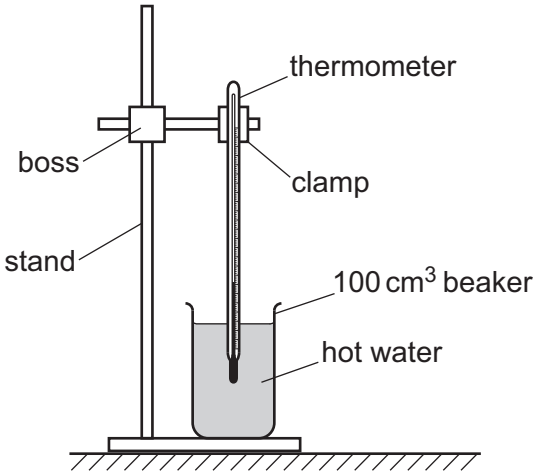

Figure 3.2

Readings of the temperature θ_1 of the water are recorded every 1.0 minute for 6.0 minutes. The student gently stirs the water before taking each reading.

The readings are recorded in Table 3.1 on page 10.

(i) Suggest why it is important to stir the water before taking each reading.

.....

..... [1]

(ii) The student:

- pours away the water in the beaker
- covers the sides and the bottom of the beaker with aluminium foil
- repeats the procedure in the first part of **3(b)** to obtain readings of temperature θ_2 of the water in the beaker covered in aluminium foil.

The student also records the new readings in Table 3.1.

DO NOT WRITE IN THIS MARGIN

Table 3.1

time / min	0.0	1.0	2.0	3.0	4.0	5.0	6.0
θ_1 / °C	70.0	67.5	.....	63.0	61.0	60.0	58.0
θ_2 / °C	70.0	69.0	68.0	66.5	65.0	63.0	62.0

One reading was omitted in error.

Complete Table 3.1 with a suggested value for the missing temperature at 2.0 minutes. [1]

(iii) On the grid provided in Figure 3.3, plot a graph of θ_1 / °C on the *y*-axis against time / min on the *x*-axis.

Start your *x*-axis at 0.

You do **not** have to start your *y*-axis at 0.

Draw the curve of best fit for the θ_1 results. Label this line θ_1. [4]

(iv) On the same axes in Figure 3.3, plot a graph of θ_2 / °C on the *y*-axis against time / min on the *x*-axis.

Draw the curve of best fit for the θ_2 results. Label this line θ_2. [1]

(c) Use the data in Table 3.1 and your graphs in Figure 3.3 to compare the **rates** of cooling of the water in the beakers without and with the aluminium foil.

.....

.....

..... [1]

DO NOT WRITE IN THIS MARGIN DO NOT WRITE IN THIS MARGIN DO NOT WRITE IN THIS MARGIN DO NOT WRITE IN THIS MARGIN DO NOT WRITE IN THIS MARGIN

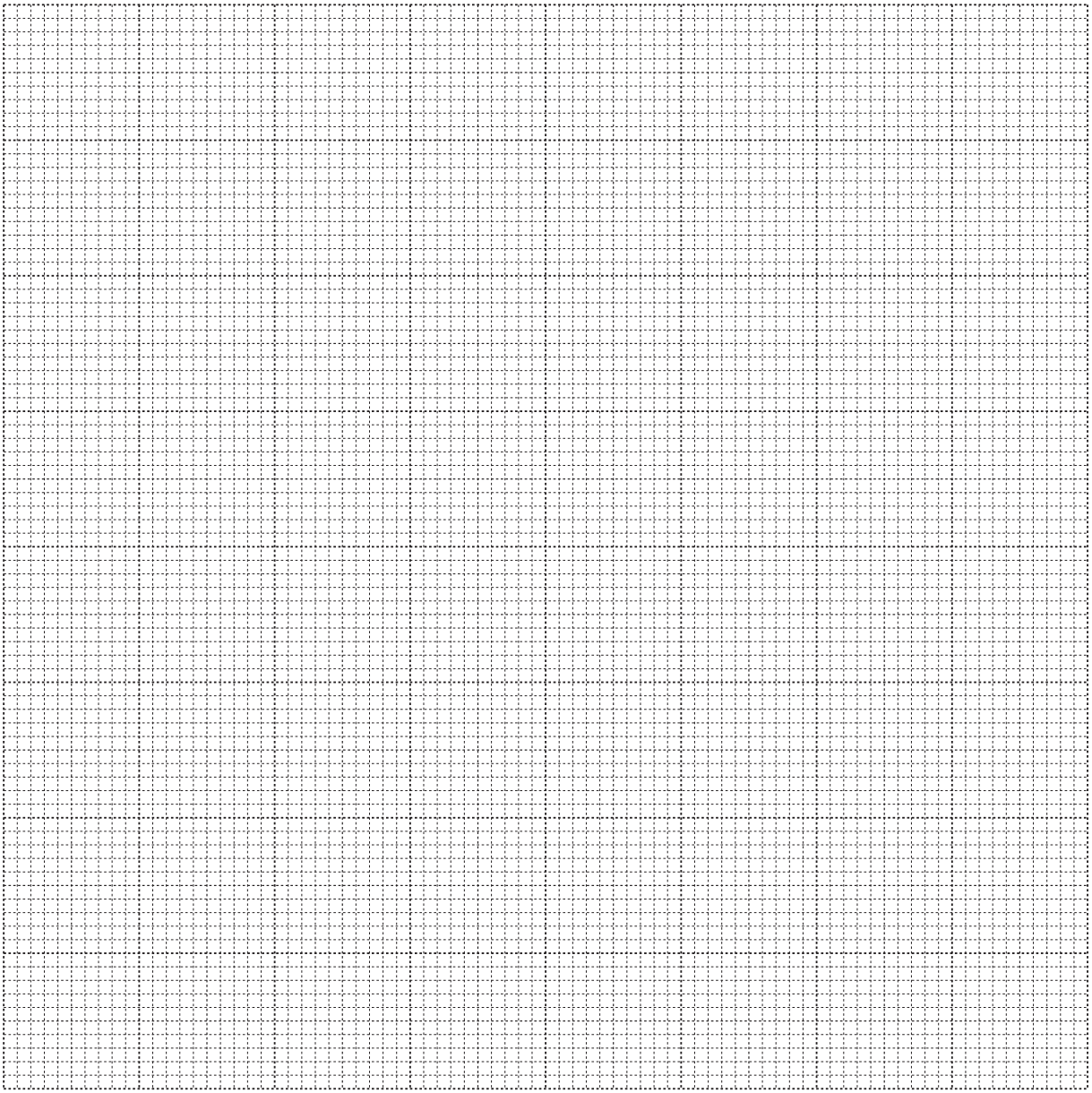

Figure 3.3

DO NOT WRITE IN THIS MARGIN
DO NOT WRITE IN THIS MARGIN
DO NOT WRITE IN THIS MARGIN
DO NOT WRITE IN THIS MARGIN
DO NOT WRITE IN THIS MARGIN

(d) (i) Explain why the thermometer bulb is placed in the middle of the beaker.

.....

..... [1]

(ii) State **two** factors that are controlled in this experiment to ensure that a valid comparison can be made.

factor 1 .....

factor 2 .....

[2]

(iii) Other than adding insulation to the beaker, suggest a change to the apparatus that will decrease the rate of cooling of the water.

.....

..... [1]

[Total: 14]

DO NOT WRITE IN THIS MARGIN DO NOT WRITE IN THIS MARGIN DO NOT WRITE IN THIS MARGIN DO NOT WRITE IN THIS MARGIN DO NOT WRITE IN THIS MARGIN

DO NOT WRITE IN THIS MARGIN
DO NOT WRITE IN THIS MARGIN
DO NOT WRITE IN THIS MARGIN
DO NOT WRITE IN THIS MARGIN
DO NOT WRITE IN THIS MARGIN

Turn over

4 Figure 4.1 shows an iron nail inside a coil of wire. The wire is connected into a circuit in series with a variable resistor.

When a current passes through the coil, the iron nail is magnetised and attracts paper clips as shown in Figure 4.1.

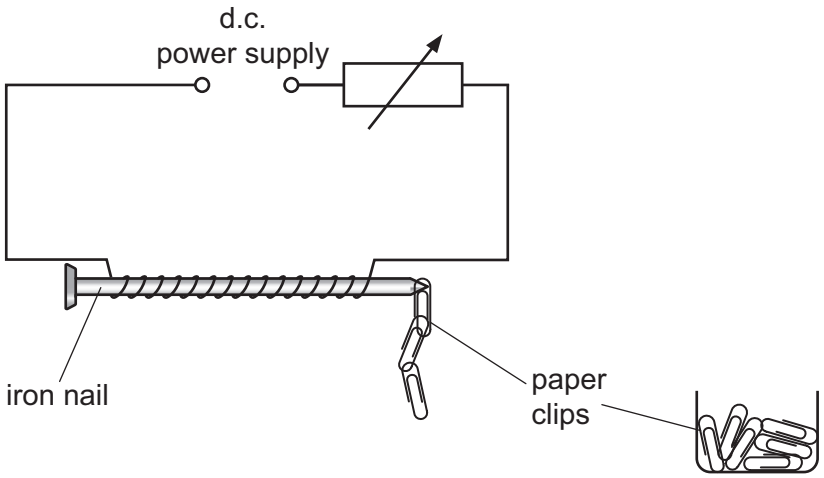

Figure 4.1

Plan an experiment to investigate how the current in the coil affects the maximum number of paper clips that can be suspended in a chain from one end of the nail.

In your plan, you should:

- state any additional apparatus you use and how it is added into the circuit
- state how you will change the current in the coil
- state any key variables to control
- draw a table with column headings to display the results (you are not required to enter any readings into the table)
- explain how you will use the results to reach a conclusion.

.....

.....

.....

.....

DO NOT WRITE IN THIS MARGIN

DO NOT WRITE IN THIS MARGIN
DO NOT WRITE IN THIS MARGIN
DO NOT WRITE IN THIS MARGIN
DO NOT WRITE IN THIS MARGIN
DO NOT WRITE IN THIS MARGIN

.....

.....

.....

BLANK PAGE

DO NOT WRITE IN THIS MARGIN
DO NOT WRITE IN THIS MARGIN
DO NOT WRITE IN THIS MARGIN
DO NOT WRITE IN THIS MARGIN
DO NOT WRITE IN THIS MARGIN

Permission to reproduce items where third-party owned material protected by copyright is included has been sought and cleared where possible. Every reasonable effort has been made by the publisher (Cambridge University Press & Assessment) to trace copyright holders, but if any items requiring clearance have unwittingly been included, the publisher will be pleased to make amends at the earliest possible opportunity.

To avoid the issue of disclosure of answer-related information to candidates, all copyright acknowledgements are reproduced online in our Copyright Acknowledgements Booklet. This is produced for each series of examinations and is freely available to download at www.cambridgeinternational.org after the live examination series.

Cambridge International Education is the name of our awarding body and a part of Cambridge University Press & Assessment, which is a department of the University of Cambridge.

© Cambridge University Press & Assessment 2026