1. Question | 5070 May-June 2023 P2 V1 Q8

8 This question is about electrolysis.

(a) The table shows some information about the electrolysis of three different electrolytes using graphite electrodes.

Complete Table 8.1 with the names of the products at each electrode.

Table 8.1

electrolyte	product at anode	product at cathode
dilute aqueous potassium chloride		
aqueous copper(II) sulfate		
molten lead(II) iodide		

[3]

(b) The electrolysis of aqueous copper(II) sulfate gives different products when copper electrodes are used instead of graphite electrodes.

Describe the observations during the electrolysis with copper electrodes.

.....

.....

..... [2]

(c) Magnesium is manufactured by the electrolysis of molten magnesium chloride.

At the anode, chloride ions react to make chlorine molecules.

Construct the ionic half-equation for this electrode reaction.

..... [1]

[Total: 6]

2. Question | 5070 May-June 2023 P2 V2 Q8

8 This question is about electrolysis.

(a) The table shows some information about the electrolysis of three different electrolytes using graphite electrodes.

Complete Table 8.1 with the names of the products at each electrode.

Table 8.1

electrolyte	product at anode	product at cathode
concentrated aqueous potassium iodide		
dilute sulfuric acid		
molten lead(II) bromide		

[3]

(b) Give **two** reasons why graphite is a suitable material from which to make electrodes.

1 .....

2 .....

[2]

(c) Aluminium is manufactured by the electrolysis of aluminium oxide dissolved in molten cryolite.

At the anode, oxide ions react to make oxygen molecules.

Construct the ionic half-equation for this electrode reaction.

..... [1]

[Total: 6]

3. Question part 1/2 | 5070 Oct-Nov 2023 P2 V1 Q4

4 **(a)** Concentrated aqueous calcium bromide is electrolysed using graphite electrodes.

Predict the product at each electrode.

anode .....

cathode .....
[2]

(b) Molten calcium bromide is electrolysed using graphite electrodes.

Construct the ionic half-equation for the reaction at each electrode when molten calcium bromide is electrolysed.

anode .....

cathode .....
[2]

(c) Describe a test for aqueous bromide ions. Include the observations for a positive result.

test .....

observations .....
[2]

(d) Calcium reduces zinc ions to zinc.

$$Ca + Zn^{2+} \longrightarrow Zn + Ca^{2+}$$

(i) Explain, in terms of the movement of electrons, how calcium acts as a reducing agent in this equation.

.....

..... [1]

(ii) State the oxidation number of the Zn^{2+} ion.

..... [1]

3. Question part 2/2 | 5070 Oct-Nov 2023 P2 V1 Q4

(e) Sulfur dibromide is produced when sulfur reacts with bromine.

Complete Fig. 4.1 to show the dot-and-cross diagram for a molecule of sulfur dibromide.

Show only the outer shell electrons.

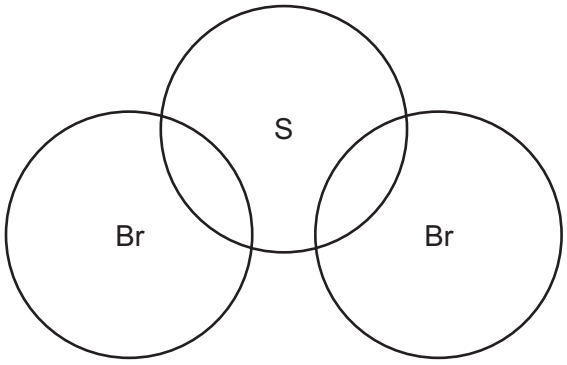

Fig. 4.1

[2]

[Total: 10]

4. Question part 1/2 | 5070 Oct-Nov 2023 P2 V2 Q4

4 **(a)** Concentrated aqueous magnesium iodide is electrolysed using graphite electrodes.

Predict the product at each electrode.

anode .....

cathode .....
[2]

(b) Molten magnesium iodide is electrolysed using graphite electrodes.

Construct the ionic half-equation for the reaction at each electrode when molten magnesium iodide is electrolysed.

anode .....

cathode .....
[2]

(c) Describe a test for aqueous iodide ions. Include the observations for a positive result.

test .....

observations .....
[2]

(d) Iodide ions reduce manganese(IV) oxide, MnO_2, to Mn^{2+} ions.

$$2I^- + MnO_2 + 4H^+ \rightarrow Mn^{2+} + I_2 + 2H_2O$$

(i) Explain, in terms of movement of electrons, how iodide ions act as a reducing agent in this reaction.

.....

..... [1]

(ii) State the name of the type of reaction that involves simultaneous oxidation and reduction.

..... [1]

4. Question part 2/2 | 5070 Oct-Nov 2023 P2 V2 Q4

(e) Phosphorus(III) iodide is produced when phosphorus reacts with iodine.

Complete Fig. 4.1 to show the dot-and-cross diagram for a molecule of phosphorus(III) iodide.

Show only the outer shell electrons.

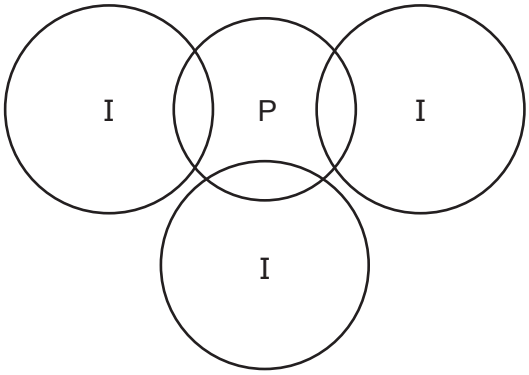

Fig. 4.1

[2]

[Total: 10]

5. Question | 5070 Specimen 2023 P2 Q4

4 Calcium chloride, $CaCl_2$, is an ionic compound.

(a) Deduce the electronic configuration for each of the ions in calcium chloride.

calcium ion .....

chloride ion .....
[2]

(b) When **molten** calcium chloride is electrolysed with inert electrodes, calcium and chlorine are formed.

Construct ionic half-equations for the two electrode reactions.

reaction at the negative electrode

.....

reaction at the positive electrode

.....
[2]

(c) The electrolysis of concentrated aqueous calcium chloride with inert electrodes is similar to that of concentrated aqueous sodium chloride.

Predict the products of the electrolysis of concentrated **aqueous** calcium chloride with inert electrodes.

..... [1]

(d) Calcium chloride has a high melting point.

Explain why calcium chloride has a high melting point. Use ideas about structure and bonding.

.....

.....

.....

..... [2]

[Total: 7]

6. Question | 5070 Oct-Nov 2024 P2 V1 Q3

3 Fig. 3.1 shows the apparatus used for the electrolysis of concentrated aqueous sodium chloride using graphite electrodes.

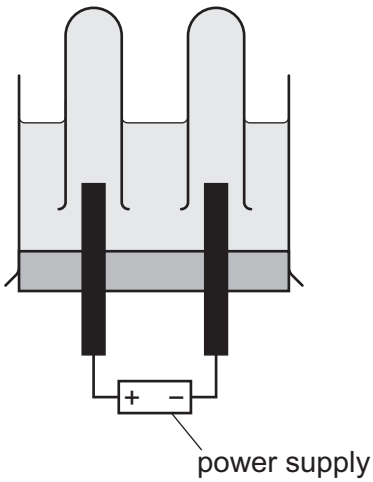

Fig. 3.1

(a) Label the cathode on Fig. 3.1. [1]

(b) Explain why concentrated aqueous sodium chloride conducts electricity.

..... [1]

(c) **(i)** Name the product formed at the cathode.

..... [1]

(ii) Chlorine is formed at the anode.

Construct the ionic half-equation for the reaction at the anode.

..... [1]

(d) Graphite is suitable as an electrode because it conducts electricity.

State one **other** property of graphite that makes it suitable for use as an electrode.

..... [1]

(e) State the product formed at the cathode when molten sodium chloride is electrolysed.

..... [1]

[Total: 6]

7. Question | 5070 Oct-Nov 2024 P2 V2 Q3

3 Fig. 3.1 shows the apparatus used for the electrolysis of dilute sulfuric acid using graphite electrodes.

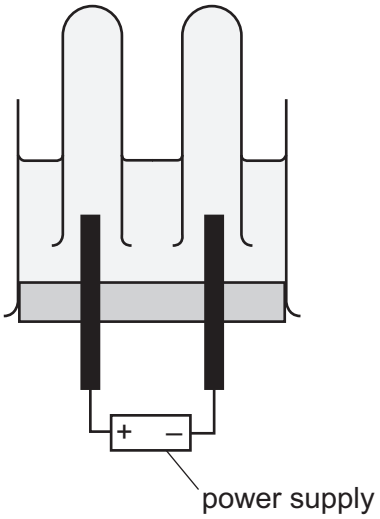

Fig. 3.1

(a) Define the term electrolysis.

.....

..... [2]

(b) Label the anode on Fig. 3.1. [1]

(c) **(i)** Name the product at the cathode.

..... [1]

(ii) Oxygen is formed at the anode.

Construct the ionic half-equation for the reaction at the anode.

..... [1]

(d) Name a suitable element other than graphite that is used for the electrodes in this electrolysis.

..... [1]

[Total: 6]

8. Question | 5070 May-June 2025 P2 V1 Q2

2 A concentrated aqueous solution of copper(II) bromide is electrolysed using graphite electrodes.

(a) Graphite has good electrical conductivity.

(i) Explain why graphite has good electrical conductivity.

Use ideas about structure and bonding.

.....

.....

.....

..... [2]

(ii) State one **other** property of graphite that makes it suitable for use as an electrode during electrolysis.

..... [1]

(b) Predict the products of the electrolysis of concentrated aqueous copper(II) bromide with graphite electrodes.

product at anode .....

product at cathode .....
[2]

(c) Dilute sulfuric acid is electrolysed using graphite electrodes to form oxygen and hydrogen.

Construct the ionic half-equation for the reaction at each electrode.

reaction at anode .....

reaction at cathode .....
[2]

(d) Hydrogen and oxygen are used in a fuel cell to produce electricity.

(i) Name the only chemical product formed in a fuel cell.

..... [1]

(ii) Describe **one** disadvantage of using hydrogen–oxygen fuel cells in vehicles compared to gasoline or petrol engines.

.....

..... [1]

[Total: 9]

9. Question | 5070 May-June 2025 P2 V2 Q2

2 A dilute aqueous solution of magnesium chloride is electrolysed using graphite electrodes.

(a) Graphite has a high melting point and is inert.

(i) Explain why graphite has a high melting point.

Use ideas about structure and bonding.

.....

.....

.....

..... [2]

(ii) State one **other** property of graphite that makes it suitable for use as an electrode during electrolysis.

..... [1]

(b) Predict the products of the electrolysis of dilute aqueous magnesium chloride with graphite electrodes.

product at anode .....

product at cathode .....
[2]

(c) Molten aluminium oxide is electrolysed using graphite electrodes to form oxygen and aluminium.

Construct the ionic half-equation for the reaction at each electrode.

reaction at anode .....

reaction at cathode .....
[2]

(d) A metal object is electroplated with copper.

The metal object is the cathode during this electrolysis.

State the name of the substance used for the anode and for the electrolyte.

anode .....

electrolyte .....
[2]

[Total: 9]

10. Question | 5070 Oct-Nov 2025 P2 V1 Q9

9 Anhydrous copper(II) sulfate is a white solid.

(a) State the meaning of the term anhydrous.

.....

..... [1]

(b) Anhydrous copper(II) sulfate is added to water.

State the colour of the solution formed.

..... [1]

(c) Aqueous ammonia is added dropwise until in excess to a small volume of aqueous copper(II) sulfate.

Describe the observations during this addition.

.....

..... [2]

(d) Describe the observations when aqueous barium nitrate is added to aqueous copper(II) sulfate.

..... [1]

(e) Aqueous copper(II) sulfate is electrolysed separately with carbon electrodes and with copper electrodes.

Complete Table 9.1.

Table 9.1

	electrolysis of aqueous copper(II) sulfate	
	carbon electrodes	copper electrodes
observations at anode		
observations at cathode		

[4]

(f) Explain why aqueous copper(II) sulfate conducts electricity but solid copper(II) sulfate does **not** conduct electricity.

.....

.....

..... [1]

[Total: 10]

11. Question | 5070 Oct-Nov 2025 P2 V2 Q9

9 Hydrated zinc chloride is a white solid.

(a) State the meaning of the term hydrated.

.....

..... [1]

(b) Aqueous ammonia is added dropwise until in excess to a small volume of aqueous zinc chloride.

Describe the observations during this addition.

.....

..... [2]

(c) Describe the observations when aqueous silver nitrate is added to aqueous zinc chloride.

..... [1]

(d) Dilute and concentrated aqueous zinc chloride are electrolysed separately using carbon electrodes.

Complete Table 9.1.

Table 9.1

	dilute aqueous zinc chloride	concentrated aqueous zinc chloride
product at anode		
product at cathode		

[4]

(e) Explain why aqueous zinc chloride conducts electricity but solid zinc chloride does **not** conduct electricity.

.....

.....

..... [1]

[Total: 9]

12. Question part 1/2 | 5070 May-June 2026 P2 V1 Q4

4 Potassium iodide is an ionic compound.

(a) Concentrated and dilute aqueous potassium iodide are separately electrolysed using graphite electrodes.

Complete Table 4.1 about the products of the two electrolysis reactions.

Table 4.1

	concentrated aqueous potassium iodide	**dilute aqueous potassium iodide**
product formed at anode		
product formed at cathode		

[4]

(b) Molten potassium iodide is electrolysed using graphite electrodes.

Construct ionic half-equations to show the reactions at the anode and at the cathode.

anode .....

cathode .....

[2]

(c) State **two** reasons why graphite is a suitable material for the electrodes used in electrolysis.

1 .....

2 .....

[2]

12. Question part 2/2 | 5070 May-June 2026 P2 V1 Q4

(d) The ionic equation for the reaction between aqueous potassium iodide and aqueous copper(II) chloride is shown.

$$4I^- + 2Cu^{2+} \rightarrow 2CuI + I_2$$

(i) State the oxidation number of copper in copper(II) chloride.

..... [1]

(ii) The reaction is an example of a redox reaction.

Explain how the equation shows that both oxidation and reduction take place during the reaction.

oxidation .....

.....

reduction .....

.....

[2]

[Total: 11]

13. Question part 1/2 | 5070 May-June 2026 P2 V2 Q4

4 Copper(II) sulfate is an ionic compound.

(a) The electrolysis of aqueous copper(II) sulfate is done using copper or graphite electrodes.

Complete Table 4.1 about the observations made in the two electrolysis reactions.

Table 4.1

	observation at anode	**observation at cathode**
using copper electrodes		
using graphite electrodes		

[4]

(b) Molten barium iodide is electrolysed using graphite electrodes.

Construct ionic half-equations to show the reactions at the anode and at the cathode.

anode .....

cathode .....

[2]

(c) Graphite is a suitable material for the electrodes used in electrolysis because it is inert and has good electrical conductivity.

(i) State the meaning of the word inert.

..... [1]

(ii) Name one metal that is used as an inert electrode.

..... [1]

(d) The ionic equation for the reaction between magnesium and aqueous copper(II) sulfate is shown.

$$Mg(s) + Cu^{2+}(aq) \rightarrow Mg^{2+}(aq) + Cu(s)$$

(i) State the oxidation number of copper in copper(II) sulfate.

..... [1]

13. Question part 2/2 | 5070 May-June 2026 P2 V2 Q4

(ii) The reaction is an example of a redox reaction.

Explain how the equation shows that both oxidation and reduction take place during the reaction.

oxidation .....

.....

reduction .....

.....

[2]

[Total: 11]