Diploma Programme
Programme du diplôme
Programa del Diploma

Markscheme

May 2023

Mathematics: applications and interpretation

Higher level

Paper 2

23 pages

International Baccalaureate®
Baccalauréat International
Bachillerato Internacional

© International Baccalaureate Organization 2023

All rights reserved. No part of this product may be reproduced in any form or by any electronic or mechanical means, including information storage and retrieval systems, without the prior written permission from the IB. Additionally, the license tied with this product prohibits use of any selected files or extracts from this product. Use by third parties, including but not limited to publishers, private teachers, tutoring or study services, preparatory schools, vendors operating curriculum mapping services or teacher resource digital platforms and app developers, whether fee-covered or not, is prohibited and is a criminal offense.

More information on how to request written permission in the form of a license can be obtained from https://ibo.org/become-an-ib-school/ib-publishing/licensing/applying-for-a-license/.

© Organisation du Baccalauréat International 2023

Tous droits réservés. Aucune partie de ce produit ne peut être reproduite sous quelque forme ni par quelque moyen que ce soit, électronique ou mécanique, y compris des systèmes de stockage et de récupération d'informations, sans l'autorisation écrite préalable de l'IB. De plus, la licence associée à ce produit interdit toute utilisation de tout fichier ou extrait sélectionné dans ce produit. L'utilisation par des tiers, y compris, sans toutefois s'y limiter, des éditeurs, des professeurs particuliers, des services de tutorat ou d'aide aux études, des établissements de préparation à l'enseignement supérieur, des fournisseurs de services de planification des programmes d'études, des gestionnaires de plateformes pédagogiques en ligne, et des développeurs d'applications, moyennant paiement ou non, est interdite et constitue une infraction pénale.

Pour plus d'informations sur la procédure à suivre pour obtenir une autorisation écrite sous la forme d'une licence, rendez-vous à l'adresse https://ibo.org/become-an-ib-school/ib-publishing/licensing/applying-for-a-license/.

© Organización del Bachillerato Internacional, 2023

Todos los derechos reservados. No se podrá reproducir ninguna parte de este producto de ninguna forma ni por ningún medio electrónico o mecánico, incluidos los sistemas de almacenamiento y recuperación de información, sin la previa autorización por escrito del IB. Además, la licencia vinculada a este producto prohíbe el uso de todo archivo o fragmento seleccionado de este producto. El uso por parte de terceros —lo que incluye, a título enunciativo, editoriales, profesores particulares, servicios de apoyo académico o ayuda para el estudio, colegios preparatorios, desarrolladores de aplicaciones y entidades que presten servicios de planificación curricular u ofrezcan recursos para docentes mediante plataformas digitales—, ya sea incluido en tasas o no, está prohibido y constituye un delito.

En este enlace encontrará más información sobre cómo solicitar una autorización por escrito en forma de licencia: https://ibo.org/become-an-ib-school/ib-publishing/licensing/applying-for-a-license/.

Instructions to Examiners

Abbreviations

M Marks awarded for attempting to use a correct **Method**.

A Marks awarded for an **Answer** or for **Accuracy**; often dependent on preceding ***M*** marks.

R Marks awarded for clear **Reasoning**.

AG Answer given in the question and so no marks are awarded.

FT Follow through. The practice of awarding marks, despite candidate errors in previous parts, for their correct methods/answers using incorrect results.

Using the markscheme

1 General

Award marks using the annotations as noted in the markscheme *eg* ***M1***, ***A2***.

2 Method and Answer/Accuracy marks

- Do **not** automatically award full marks for a correct answer; all working **must** be checked, and marks awarded according to the markscheme.
- It is generally not possible to award ***M0*** followed by ***A1***, as ***A*** mark(s) depend on the preceding ***M*** mark(s), if any.
- Where ***M*** and ***A*** marks are noted on the same line, *e.g.* ***M1A1***, this usually means ***M1*** for an **attempt** to use an appropriate method (*e.g.* substitution into a formula) and ***A1*** for using the **correct** values.
- Where there are two or more ***A*** marks on the same line, they may be awarded independently; so if the first value is incorrect, but the next two are correct, award ***A0A1A1***.
- Where the markscheme specifies ***A3***, ***M2*** *etc*., do **not** split the marks, unless there is a note.
- The response to a "show that" question does not need to restate the ***AG*** line, unless a **Note** makes this explicit in the markscheme.
- Once a correct answer to a question or part question is seen, ignore further working even if this working is incorrect and/or suggests a misunderstanding of the question. This will encourage a uniform approach to marking, with less examiner discretion. Although some candidates may be advantaged for that specific question item, it is likely that these candidates will lose marks elsewhere too.
- An exception to the previous rule is when an incorrect answer from further working is used **in a subsequent part**. For example, when a correct exact value is followed by an incorrect decimal approximation in the first part and this approximation is then used in the second part. In this situation, award ***FT*** marks as appropriate but do not award the final ***A1*** in the first part.

Examples:

	Correct answer seen	Further working seen	Any FT issues?	Action
1.	$8\sqrt{2}$	5.65685... *(incorrect decimal value)*	No. Last part in question.	Award ***A1*** for the final mark *(condone the incorrect further working)*
2.	$\frac{35}{72}$	0.468111… (incorrect decimal value)	Yes. Value is used in subsequent parts.	Award ***A0*** for the final mark *(and full **FT** is available in subsequent parts)*

3 Implied marks

Implied marks appear in **brackets e.g. *(M1)***,and can only be awarded if **correct** work is seen or implied by subsequent working/answer.

4 Follow through marks (only applied after an error is made)

Follow through (***FT***) marks are awarded where an incorrect answer from one **part** of a question is used correctly in **subsequent** part(s) (e.g. incorrect value from part (a) used in part (d) or incorrect value from part (c)(i) used in part (c)(ii)). Usually, to award ***FT*** marks, **there must be working present** and not just a final answer based on an incorrect answer to a previous part. However, if all the marks awarded in a subsequent part are for the answer or are implied, then ***FT*** marks should be awarded for *their* correct answer, even when working is not present.

For example: following an incorrect answer to part (a) that is used in subsequent parts, where the markscheme for the subsequent part is ***(M1)A1***, it is possible to award full marks for *their* correct answer, **without working being seen.** For longer questions where all but the answer marks are implied this rule applies but may be overwritten by a **Note** in the Markscheme.

- Within a question part, once an **error** is made, no further ***A*** marks can be awarded for work which uses the error, but ***M*** marks may be awarded if appropriate.

- If the question becomes much simpler because of an error then use discretion to award fewer ***FT*** marks, by reflecting on what each mark is for and how that maps to the simplified version.

- If the error leads to an inappropriate value (*e.g.* probability greater than 1, $\sin\theta = 1.5$, non-integer value where integer required), do not award the mark(s) for the final answer(s).

- The markscheme may use the word “their” in a description, to indicate that candidates may be using an incorrect value.

- If the candidate’s answer to the initial question clearly contradicts information given in the question, it is not appropriate to award any ***FT*** marks in the subsequent parts. This includes when candidates fail to complete a “show that” question correctly, and then in subsequent parts use their incorrect answer rather than the given value.

- Exceptions to these ***FT*** rules will be explicitly noted on the markscheme.

- If a candidate makes an error in one part but gets the correct answer(s) to subsequent part(s), award marks as appropriate, unless the command term was "Hence".

5 Mis-read

If a candidate incorrectly copies values or information from the question, this is a mis-read (***MR***). A candidate should be penalized only once for a particular misread. Use the ***MR*** stamp to indicate that this has been a misread and do not award the first mark, even if this is an ***M*** mark, but award all others as appropriate.

- If the question becomes much simpler because of the ***MR***, then use discretion to award fewer marks.

- If the ***MR*** leads to an inappropriate value (*e.g.* probability greater than 1, $\sin\theta = 1.5$, non-integer value where integer required), do not award the mark(s) for the final answer(s).

- Miscopying of candidates' own work does **not** constitute a misread, it is an error.

- If a candidate uses a correct answer, to a "show that" question, to a higher degree of accuracy than given in the question, this is NOT a misread and full marks may be scored in the subsequent part.

- ***MR*** can only be applied when work is seen. For calculator questions with no working and incorrect answers, examiners should **not** infer that values were read incorrectly.

6 Alternative methods

Candidates will sometimes use methods other than those in the markscheme. Unless the question specifies a method, other correct methods should be marked in line with the markscheme. If the command term is 'Hence' and not 'Hence or otherwise' then alternative methods are not permitted unless covered by a note in the mark scheme.

- Alternative methods for complete questions are indicated by **METHOD 1**, **METHOD 2**, *etc*.
- Alternative solutions for parts of questions are indicated by **EITHER** . . . **OR**.

7 Alternative forms

Unless the question specifies otherwise, **accept** equivalent forms.

- As this is an international examination, accept all alternative forms of **notation** for example 1.9 and 1,9 or 1000 and 1,000 and 1.000.

- Do not accept final answers written using calculator notation. However, ***M*** marks and intermediate ***A*** marks can be scored, when presented using calculator notation, provided the evidence clearly reflects the demand of the mark.

- In the markscheme, equivalent **numerical** and **algebraic** forms will generally be written in brackets immediately following the answer.

- In the markscheme, some **equivalent** answers will generally appear in brackets. Not all equivalent notations/answers/methods will be presented in the markscheme and examiners are asked to apply appropriate discretion to judge if the candidate work is equivalent.

8 Format and accuracy of answers

If the level of accuracy is specified in the question, a mark will be linked to giving the answer to the required accuracy. If the level of accuracy is not stated in the question, the general rule applies to final answers: *unless otherwise stated in the question all numerical answers must be given exactly or correct to three significant figures.*

Where values are used in subsequent parts, the markscheme will generally use the exact value, however candidates may also use the correct answer to 3 sf in subsequent parts. The markscheme will often explicitly include the subsequent values that come "*from the use of 3 sf values*".

Simplification of final answers: Candidates are advised to give final answers using good mathematical form. In general, for an ***A*** mark to be awarded, arithmetic should be completed, and any values that lead to integers should be simplified; for example, $\sqrt{\frac{25}{4}}$ should be written as $\frac{5}{2}$. An exception to this is simplifying fractions, where lowest form is not required (although the numerator and the denominator must be integers); for example, $\frac{10}{4}$ may be left in this form or written as $\frac{5}{2}$. However, $\frac{10}{5}$ should be written as 2, as it simplifies to an integer.

Algebraic expressions should be simplified by completing any operations such as addition and multiplication, e.g. $4e^{2x} \times e^{3x}$ should be simplified to $4e^{5x}$, and $4e^{2x} \times e^{3x} - e^{4x} \times e^{x}$ should be simplified to $3e^{5x}$. Unless specified in the question, expressions do not need to be factorized, nor do factorized expressions need to be expanded, so $x(x+1)$ and $x^2 + x$ are both acceptable.

Please note: intermediate ***A*** marks do NOT need to be simplified.

9 Calculators

A GDC is required for this paper, but if you see work that suggests a candidate has used any calculator not approved for IB DP examinations (eg CAS enabled devices), please follow the procedures for malpractice.

10. Presentation of candidate work

Crossed out work: If a candidate has drawn a line through work on their examination script, or in some other way crossed out their work, do not award any marks for that work unless an explicit note from the candidate indicates that they would like the work to be marked.

More than one solution: Where a candidate offers two or more different answers to the same question, an examiner should only mark the first response unless the candidate indicates otherwise. If the layout of the responses makes it difficult to judge, examiners should apply appropriate discretion to judge which is “first”.

1. (a) $\dfrac{9.45-8.73}{1958-1708}$ ***(M1)***

$=0.00288\ \left(\dfrac{9}{3125}\right)$ ***A1***

[2 marks]

(b) (i) the (mean) yearly change in (mean annual) temperature ***A1***

Note: Accept equivalent statements, e.g. “rate of change of temperature”.

(ii) $^{\circ}\mathrm{C}\ /\ \mathrm{year}$ **OR** degrees C per year ***A1***

Note: Do not follow through from part (b)(i) into (b)(ii).

[2 marks]

(c) attempt to substitute point and gradient into appropriate formula ***(M1)***

$8.73=0.00288\times1708+c\Rightarrow c=3.81096...$

or

$9.45=0.00288\times1958+c\ \ \Rightarrow\ \ c=3.81096$.

equation is $y=0.00288x+3.81$ ***A1***

[2 marks]

(d) attempt to substitute 2000 into their part (c) ***(M1)***

$0.00288\times2000+3.81096...$

$=9.57\ (^{\circ}\mathrm{C})\ \ (9.57096...)$ ***A1***

[2 marks]

continued…

Question 1 continued

(e) (i) $y = 0.00256x + 4.46$ $(0.00255714...x + 4.46454...)$ ***(M1)A1***

Note: Award ***(M1)A0*** for answers that show the correct method, but are presented incorrectly (e.g. no "$y =$" or truncated values etc.). Accept 4.465 as the correct answer to 4 sf.

(ii) 0.861 $(0.861333...)$ ***A1***

[3 marks]

(f) attempt to substitute 2000 into their part (e)(i) ***(M1)***

$0.00255714... \times 2000 + 4.46454...$

$= 9.58(^\circ\text{C})$ $(9.57882...(^\circ\text{C}))$ ***A1***

Note: Award ***A1*** for 9.57 from $0.00255714 \times 2000 + 4.46$.

[2 marks]

[Total: 13 marks]

2. (a) $\frac{18-4}{2}$ ***(M1)***

$(a=)\ 7$ ***A1***

[2 marks]

(b) $\frac{18+4}{2}$ **OR** $18-7$ **OR** $4+7$ ***(M1)***

$(d=)\ 11$ ***A1***

[2 marks]

(c) (time between high and low tide is) $6\text{h}15\text{m}$ **OR** 375 minutes ***(A1)***

multiplying by 2 ***(M1)***

750 minutes ***A1***

[3 marks]

(d) **EITHER**

$\frac{360^\circ}{b}=750$ ***(A1)***

OR

$7\cos(b\times 375)+11=4$ ***(A1)***

THEN

$(b=)\ 0.48$ ***A1***

Note: Award ***A1A0*** for an answer of $\frac{2\pi}{750}\left(=\frac{\pi}{375}=0.00837758...\right)$.

[2 marks]

(e) equating their cos function to 6 **OR** graphing their cos function and 6 ***(M1)***

$7\cos(0.48t)+11=6$

$\Rightarrow t=282.468...$ (minutes) ***(A1)***

$=4.70780...$ (hr) **OR** 4hr 42 mins (4hr $42.4681\ldots$ mins) ***(A1)***

so the time is $10:42$ ***A1***

[4 marks]

continued…

Question 2 continued

(f) next solution is $t = 467.531...$ ***(A1)***

$467.531... - 282.468...$

$185 \text{ (mins)} \ (185.063...)$ ***A1***

[2 marks]

[Total: 15 marks]

3. (a)

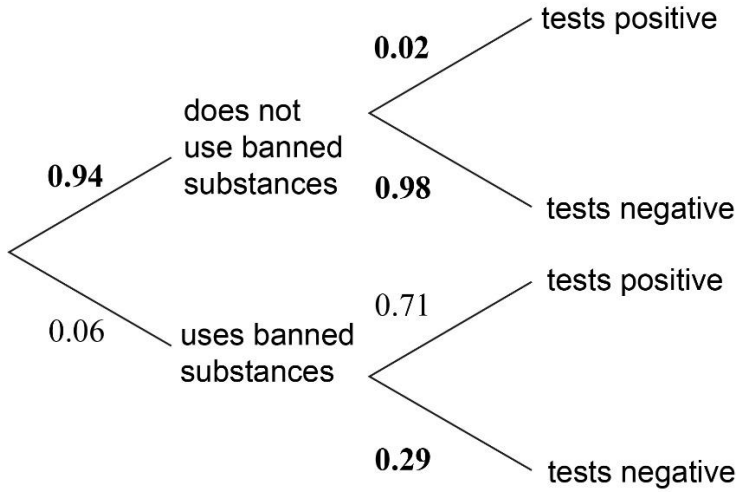

A1A1

Note: Award ***A1*** for any one value correct, ***A1*** for other three values correct. Accept percentage responses as equivalent forms on **all** branches.

[2 marks]

(b) (i) multiplication of two probabilities along the tree diagram ***(M1)***

0.94×0.98

$= 0.921 \ (0.9212, 92.1\%, 92.12\%)$ ***A1***

(ii) $(0.9212)^2$ ***(A1)***

$= 0.849 \ (0.848609\ldots, 84.9\%, 84.8609...\%)$ ***A1***

[4 marks]

continued…

Question 3 continued

(c) (i) $0.94\times0.02+0.06\times0.29$ ***(A1)(M1)***

Note: Award ***A1*** for two correct products from their tree diagram seen, ***M1*** for the addition of their two products.

0.0362 (3.62%) ***A1***

(ii) multiplying their part (c)(i) by 1300

0.0362×1300 ***(M1)***

$47.1\ (47.06)$ ***A1***

[5 marks]

(d) $p=0.02$ **OR** $p=0.98$ ***(A1)***

recognition of binomial probability with $n=20$ ***(M1)***

$\mathrm{P}(X=0)$ **OR** $\mathrm{P}(X=20)$ ***(M1)***

0.668 $(0.667607...)$ ***A1***

Note: Award ***(A1)(M1)(M1)A0*** for an answer of 0.667.

$0.98^{20}=0.668$ $(0.667607\ldots)$ is awarded full marks.

[4 marks]

(e) $\mathrm{P}(X\geq3)$ **OR** $\mathrm{P}(X\leq17)$ ***(M1)***

0.00707 $(0.00706869...)$ ***A1***

Note: Award ***(M1)A0*** for an answer of 0.00706. Award ***(M1)A0*** for an answer of 0.0599 $(0.0598989\ldots)$, obtained from the use of $\mathrm{P}(X\geq2)$.

FT from their value of p in part (d)

[2 marks]

[Total: 17 marks]

4. (a) there are more than two vertices with odd degree ***R1***

so it is not possible to travel along each road exactly once ***A1***

Note: Do not award ***R0A1***.

Award ***R1*** for "There are 4 vertices with odd degree".

[2 marks]

(b) $a = 11$, $b = 18$, $c = 17$, $d = 15$ ***A2***

Note: Award ***A1*** for any one correct, ***A2*** for all four correct.

[2 marks]

(c) attempt to use nearest neighbour algorithm ***(M1)***

Note: Award ***M1*** for first 3 vertices correct or 11, 4, 3 seen.

$\mathrm{G-E-F-B-D-A-C(-E)-G}$ **OR** $11+4+3+5+5+8+\text{their } b$ ***(A1)***

upper bound $= 54\ (\mathrm{km})$ ***A1***

[3 marks]

continued…

Question 4 continued

(d) (i) a diagram of **any** spanning tree of the subgraph ABCDEF ***(A1)***

attempt at Kruskal's algorithm or Prim's algorithm ***(M1)***

e.g. edges BF (3), EF (4) and an edge of length 5 listed or seen in any spanning tree

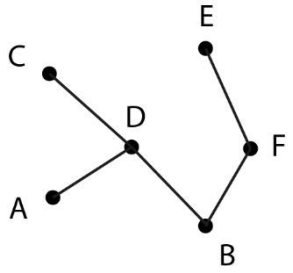

OR

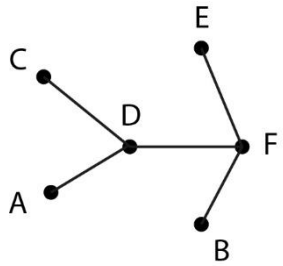

OR

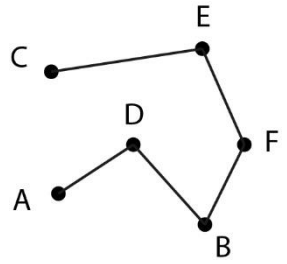

OR

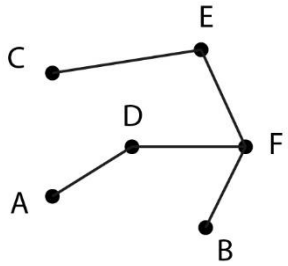

A1

(ii) 24 (km) ***A1***

Note: ***FT*** from their sketch, only if it is a spanning tree. It is not required to see the edge lengths on the sketch, since they are given in the question.

[4 marks]

continued…

Question 4 continued

(e) adding vertex G's two shortest edges to their part (d)(ii) ***(M1)***

$24+11+13$

$=48$ ***A1***

[2 marks]

(f) try removing a different vertex ***A1***

[1 mark]

(g) recognize 7 edges in optimum route ***(M1)***

Note: Award ***M1*** for a total length of 52 seen.

subtracting $0.5\times$ edges from 52 ***(M1)***

$52-7\times 0.5$

$=48.5\ (\text{km})$ ***A1***

[3 marks]

[Total: 17 marks]

5. (a) $(s_{n-1} =)1.30243...$ ***(M1)(A1)***

$1.70\ (1.69632)$ ***A1***

Note: Award ***(M1)A0A0*** for a value of $(s_n =)\ 1.28934...$ or $(s_n{}^2 =)\ 1.6624$ seen.

[3 marks]

(b) the variance and the mean are similar ***R1***

Note: Do not accept a general statement "the variance and the mean are equal" unless their answer in part (a) is 1.76.

[1 mark]

(c) (i) attempt to find $\mathrm{P}(X = 4)$ under the null hypothesis $(= 0.0687830...)$ ***(M1)***

multiplying by 50 ***(M1)***

$j = 3.44\ (3.43915...)$ ***A1***

(ii) **EITHER**

attempt to find $\mathrm{P}(X \geq 5)$ under the null hypothesis and multiply by 50 ***(M1)***

OR

$50 - (8.60 + 15.14 + 13.32 + 7.82 + 3.44)\quad (= 5.12 - 3.44)$ ***(M1)***

THEN

$k = 1.68\ (1.67925...)$ ***A1***

[5 marks]

(d) there are expected frequencies less than 5 ***A1***

[1 mark]

continued…

Question 5 continued

(e) 3 ***A1***

[1 mark]

(f) $0.991\ (0.991187)$ ***(M1)A1***

Note: Award ***M1*** for a table of observed and expected frequencies with columns for 4 and 5 or more combined.

[2 marks]

(g) $99\% > 5\%$ ***R1***

EITHER

so there is insufficient evidence to reject H_0. ***A1***

OR

we accept that the number of sightings follows a Poisson distribution ***A1***

Note: Do not award ***R0A1***.

A p-value must be seen in part (f) to award ***FT***.

[2 marks]

[Total: 15 marks]

6. (a) attempt to solve $\det(A-\lambda I)=0$ ***(M1)***

$(-0.05-\lambda)^2+25=0$ ***(A1)***

$-0.05-\lambda=\pm 5\mathrm{i}$ ***(A1)***

$\lambda=-0.05\pm 5\mathrm{i}$ ***A1***

[4 marks]

(b) (i) spiral ***A1***

(ii) inwards / towards O ***A1***

[2 marks]

(c) (i) attempt to substitute $(20,\ 0)$ into expression for $\frac{\mathrm{d}y}{\mathrm{d}t}$ ***(M1)***

$-5(20)-0.05(0)$

$\frac{\mathrm{d}y}{\mathrm{d}t}=-100\ (\mathrm{m\,s^{-1}})$ ***A1***

(ii) $\frac{\mathrm{d}x}{\mathrm{d}t}=-1$ ***(A1)***

$\frac{\mathrm{d}y}{\mathrm{d}x}=\frac{\mathrm{d}y}{\mathrm{d}t}\div\frac{\mathrm{d}x}{\mathrm{d}t}$ **OR** $\frac{\mathrm{d}y}{\mathrm{d}x}=\frac{\mathrm{d}y}{\mathrm{d}t}\times\frac{\mathrm{d}t}{\mathrm{d}x}$ ***(M1)***

$(=-100\div -1=)\ 100$ ***A1***

[5 marks]

continued…

Question 6 continued

(d)

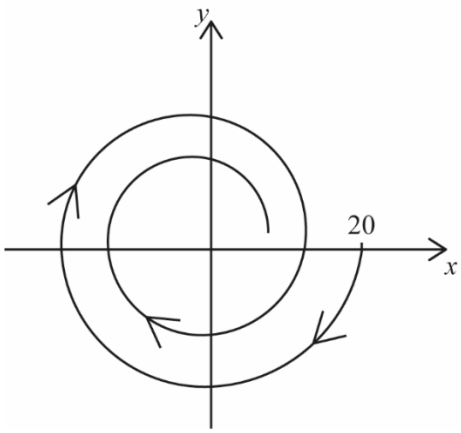

A4

Note: Award ***A1*** for starting at $(20,\ 0)$, ***A1*** for spiral inwards, ***A1*** for clockwise, ***A1*** for non-negative gradient at $(20,\ 0)$.

[4 marks]

[Total: 15 marks]

7. (a) using area of trapezoid formula ***M1***

$\sin(15^\circ)\times\frac{1+2}{2}$ ***A1***

$=\frac{3}{2}\sin(15^\circ)$ ***AG***

[2 marks]

(b) (i) $\boldsymbol{M}_6=\begin{pmatrix}\frac{1}{2}\cos 90^\circ & -\frac{1}{2}\sin 90^\circ\\ \frac{1}{2}\sin 90^\circ & \frac{1}{2}\cos 90^\circ\end{pmatrix}$ ***(M1)***

$=\begin{pmatrix}0 & -\frac{1}{2}\\ \frac{1}{2} & 0\end{pmatrix}$ ***A1***

(ii) multiplying their part (b)(i) and point $(0,\ -1)$ (in any order) ***M1***

$\begin{pmatrix}0 & -\frac{1}{2}\\ \frac{1}{2} & 0\end{pmatrix}\times\begin{pmatrix}0\\ -1\end{pmatrix}$

$\left(\frac{1}{2},\ 0\right)$ ***A1***

[4 marks]

continued…

Question 7 continued

(c) (i) $\begin{pmatrix} \cos\left(k\times 15^\circ\right) & -\sin\left(k\times 15^\circ\right) \\ \sin\left(k\times 15^\circ\right) & \cos\left(k\times 15^\circ\right) \end{pmatrix}$ ***A1***

(ii) $\begin{pmatrix} 1-\frac{k}{12} & 0 \\ 0 & 1-\frac{k}{12} \end{pmatrix}$ ***A1***

(iii) $k\times 15^\circ$ ***A1***

(iv) $1-\frac{k}{12}$ ***A1***

[4 marks]

(d) **METHOD 1 (using part (c)(iv))**

$\left(1-\frac{k}{12}\right)^2$ ***A2***

METHOD 2 (using full matrix M_k)

$$\left|\begin{pmatrix} \left(1-\frac{k}{12}\right)\cos\left(k\times 15^\circ\right) & -\left(1-\frac{k}{12}\right)\sin\left(k\times 15^\circ\right) \\ \left(1-\frac{k}{12}\right)\sin\left(k\times 15^\circ\right) & \left(1-\frac{k}{12}\right)\cos\left(k\times 15^\circ\right) \end{pmatrix}\right|$$

$$=\left(1-\frac{k}{12}\right)^2\cos^2\left(k\times 15^\circ\right)+\left(1-\frac{k}{12}\right)^2\sin^2\left(k\times 15^\circ\right)$$ ***(M1)***

$$=\left(1-\frac{k}{12}\right)^2\left(\cos^2\left(k\times 15^\circ\right)+\sin^2\left(k\times 15^\circ\right)\right)$$

$$=\left(1-\frac{k}{12}\right)^2$$ ***A1***

[2 marks]

continued…

Question 7 continued

(e) recognizing to multiply by 2 and by original area ***(M1)***

attempt to sum their answer to part (d), $k = 0, 1, ..., 11$ ***(M1)***

a correct expression ***(A1)***

e.g. $0.776457...\left(1^2 + \left(\frac{11}{12}\right)^2 + ... + \left(\frac{1}{12}\right)^2\right)$ **OR** $2\sum_{k=0}^{11}\left(1 - \frac{k}{12}\right)^2 \times \frac{3}{2}\sin 15^\circ$

OR $\sum_{k=0}^{11}\left(1 - \frac{k}{12}\right)^2 \times 0.776457...$ **OR** $2\sum_{k=1}^{12}\left(\frac{k}{12}\right)^2 \times \frac{3}{2}\sin\left(15^\circ\right)$

3.50 $(3.50484...)$ (square units)

Note: Award at most ***M0(M1)(A1)A0*** for an unsupported final answer of "1.75242..."

(A1)

[4 marks]

(f) $\boldsymbol{N}_k = \begin{pmatrix} -1 & 0 \\ 0 & 1 \end{pmatrix} \times \boldsymbol{M}_k$ ***A1A1***

Note: Award ***A1A0*** if correct matrices are written in the wrong order.

[2 marks]

[Total: 18 marks]