Diploma Programme
Programme du diplôme
Programa del Diploma

Mathematics: applications and interpretation
Standard level
Paper 1

1 May 2024

Zone A afternoon | **Zone B** afternoon | **Zone C** afternoon

Candidate session number

1 hour 30 minutes

Instructions to candidates

- Write your session number in the boxes above.
- Do not open this examination paper until instructed to do so.
- A graphic display calculator is required for this paper.
- Answer all questions.
- Answers must be written within the answer boxes provided.
- Unless otherwise stated in the question, all numerical answers should be given exactly or correct to three significant figures.
- A clean copy of the **mathematics: applications and interpretation SL formula booklet** is required for this paper.
- The maximum mark for this examination paper is **[80 marks]**.

23 pages

2224 – 7204
© International Baccalaureate Organization 2024

24EP01

International Baccalaureate
Baccalauréat International
Bachillerato Internacional

Please **do not** write on this page.

Answers written on this page
will not be marked.

Answers must be written within the answer boxes provided. Full marks are not necessarily awarded for a correct answer with no working. Answers must be supported by working and/or explanations. Solutions found from a graphic display calculator should be supported by suitable working. For example, if graphs are used to find a solution, you should sketch these as part of your answer. Where an answer is incorrect, some marks may be given for a correct method, provided this is shown by written working. You are therefore advised to show all working.

1. [Maximum mark: 7]

The following data show the heights, in metres, of six players in a basketball team.

1.67	1.60	1.68	2.31	2.31	2.19

(a) For these six players, find

(i) the mean height.

(ii) the median height.

(iii) the modal height.

(iv) the range of the heights. [6]

A new player, Gheorghe, joins the team. Their height is measured as 1.98 metres to the nearest centimetre.

(b) Write down the shortest possible height of Gheorghe. [1]

. . . . . .

. . . . . .

. . . . . .

. . . . . .

. . . . . .

. . . . . .

. . . . . .

. . . . . .

. . . . . .

. . . . . .

. . . . . .

. . . . . .

2. [Maximum mark: 6]

A teacher surveys their students to find out if they have eaten at the local Thai and Indian cafés. The results of the survey are shown in the following Venn diagram.

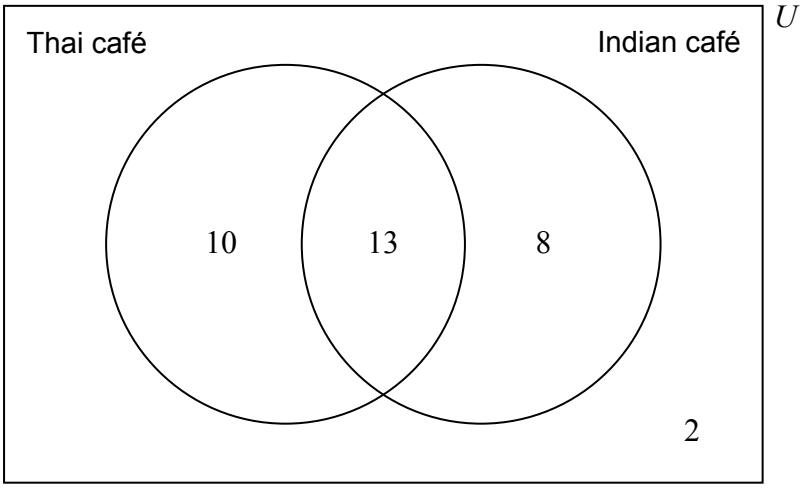

(a) Write down the number of students surveyed. [1]

(b) Write down the number of students who have not eaten at the Indian café. [1]

A student is chosen at random from those surveyed.

(c) Find the probability this student has eaten at both the Thai café and the Indian café. [1]

Let T be the event: a student has eaten at the Thai café.
Let I be the event: a student has eaten at the Indian café.

(d) Find $\mathrm{P}(T \cup I)$. [1]

(e) State whether the events T and I are mutually exclusive. Justify your answer. [2]

(This question continues on the following page)

(Question 2 continued)

. . . . . .

. . . . . .

. . . . . .

. . . . . .

. . . . . .

. . . . . .

. . . . . .

. . . . . .

. . . . . .

. . . . . .

. . . . . .

. . . . . .

Please **do not** write on this page.

Answers written on this page
will not be marked.

3. [Maximum mark: 7]

On 1 January 2025, the Faber Car Company will release a new car to global markets. The company expects to sell 40 cars in January 2025. The number of cars sold each month can be modelled by a geometric sequence where $r = 1.1$.

(a) Use this model to find the number of cars that will be sold in December 2025. [2]

(b) Use this model to find the total number of cars that will be sold in the year

(i) 2025.

(ii) 2026. [5]

4. [Maximum mark: 7]

A cell phone starts charging at $07{:}00$. While being charged, the percentage of power, P, in the phone is modelled by the function $P = 100 - 60 \times a^{-t}$, where t is the number of hours after $07{:}00$.

(a) Find the percentage of power in the phone at $07{:}00$. [2]

The percentage of power in the phone reaches $75\,\%$ at $08{:}00$.

(b) Find the value of a. [2]

(c) Draw the graph of $P = 100 - 60 \times a^{-t}$ on the following set of axes. [2]

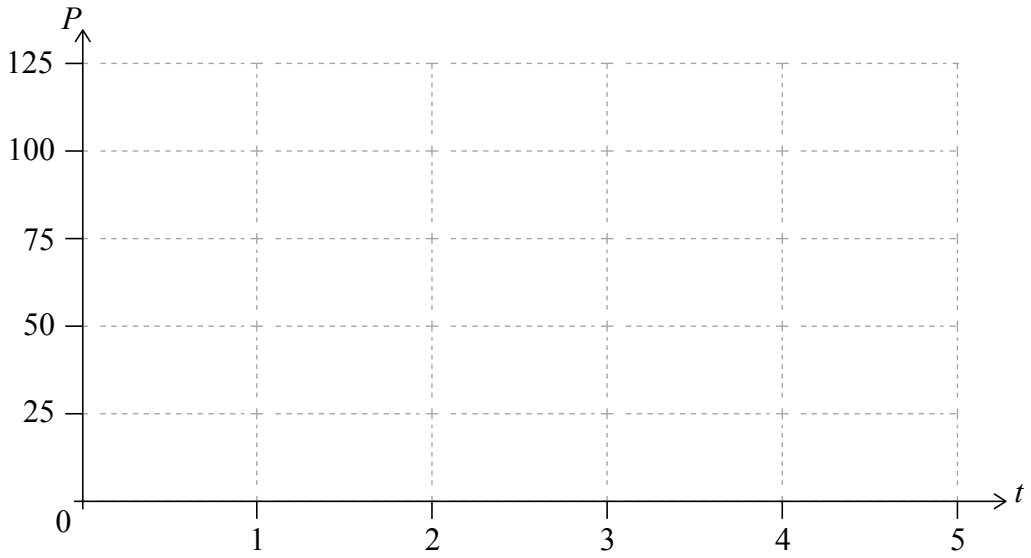

(d) State a mathematical reason why the model predicts the percentage of power in the phone will never reach $100\,\%$. [1]

(This question continues on the following page)

(Question 4 continued)

. . . . . .

. . . . . .

. . . . . .

. . . . . .

. . . . . .

. . . . . .

. . . . . .

. . . . . .

. . . . . .

. . . . . .

. . . . . .

. . . . . .

Please **do not** write on this page.

Answers written on this page
will not be marked.

5. [Maximum mark: 6]

Maan deposited $\$100\,000$ into a savings account with a nominal annual interest rate of $I\,\%$ **compounded monthly**. At the end of the eighth year, the amount in the account had increased to $\$150\,000$.

(a) Find the value of I. [3]

Maan withdraws the $\$150\,000$ and places it in an annuity, earning a nominal annual interest rate of $6.1\,\%$ **compounded monthly**. At the end of each month, Maan will receive a payment of $\$1000$.

(b) Find the amount of money remaining in the annuity at the end of 10 years. Express your answer to the nearest dollar. [3]

. . . . . .

. . . . . .

. . . . . .

. . . . . .

. . . . . .

. . . . . .

. . . . . .

. . . . . .

. . . . . .

. . . . . .

. . . . . .

. . . . . .

6. [Maximum mark: 6]

Points $A(3, 4)$, $B(9, 6)$ and $C(11, 2)$ are shown on the following diagram, along with the perpendicular bisectors of [AB], [AC] and [BC].

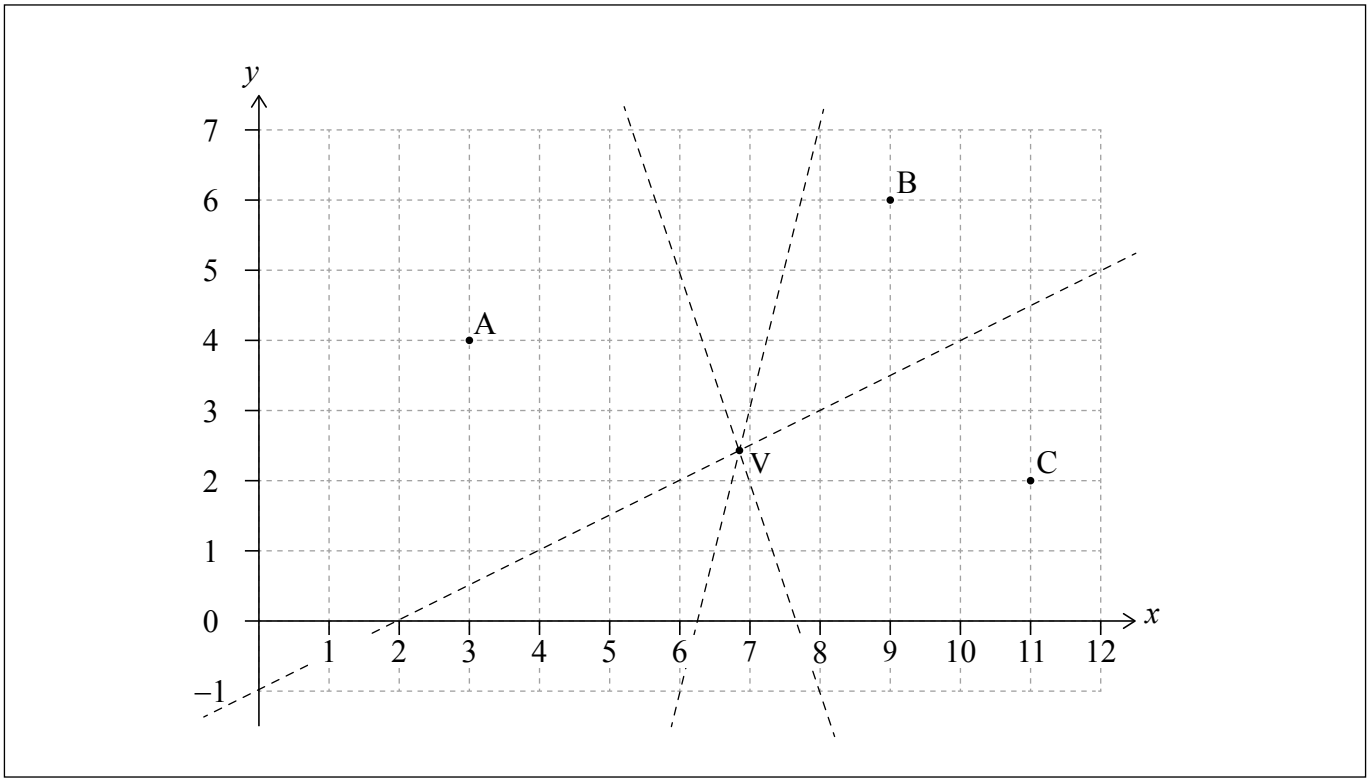

The perpendicular bisector of [BC] intercepts the axes at coordinates $(0, -1)$ and $(2, 0)$.

(a) Write down the equation of the perpendicular bisector of [BC]. [2]

The equation of the perpendicular bisector of [AB] is $y = -3x + 23$.

(b) Find the coordinates of point V where the perpendicular bisectors meet. Give your answer to four significant figures. [2]

A Voronoi diagram is constructed with points A, B and C as the three sites.

(c) Draw, clearly, the edges of the Voronoi diagram on the given diagram. [2]

(This question continues on the following page)

(Question 6 continued)

. . . . . .

. . . . . .

. . . . . .

. . . . . .

. . . . . .

. . . . . .

. . . . . .

. . . . . .

. . . . . .

. . . . . .

. . . . . .

. . . . . .

7. [Maximum mark: 6]

The following graph shows the depth of water, d metres, in a river at t hours after $12{:}00$.

At $15{:}00$, the depth of water reaches $7\,\text{m}$, its highest level. At $21{:}00$, the depth of water drops to $1\,\text{m}$, its lowest level.

The depth can be modelled by the function $d(t) = a\sin(bt) + 4$.

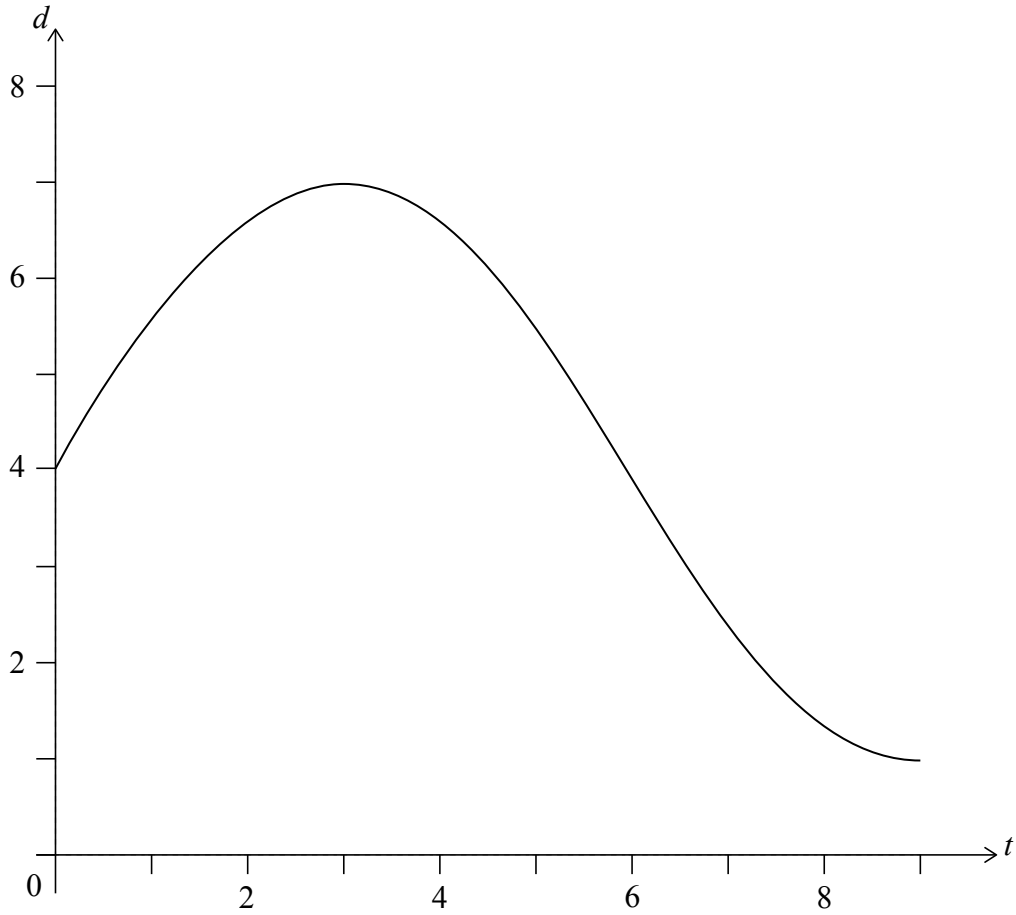

(a) Find the value of a. [1]

(b) Find the value of b. [2]

(c) Find the first time after $12{:}00$ when the depth is equal to $3\,\text{m}$. Give your answer to the nearest minute. [3]

(This question continues on the following page)

(Question 7 continued)

. . . . . .

. . . . . .

. . . . . .

. . . . . .

. . . . . .

. . . . . .

. . . . . .

. . . . . .

. . . . . .

. . . . . .

. . . . . .

. . . . . .

Please **do not** write on this page.

Answers written on this page
will not be marked.

8. [Maximum mark: 6]

The formula $F = 1.8C + 32$ is used to convert a temperature in degrees Celsius, C, to degrees Fahrenheit, F.

(a) (i) Find a formula for converting a temperature in degrees Fahrenheit to degrees Celsius.

(ii) Find the temperature in degrees Celsius that is recorded as 77 degrees Fahrenheit. [3]

Over one year, the mean daily temperature in Mexico City was calculated to be 17 degrees Celsius with a standard deviation of 9 degrees Celsius.

(b) For the same year, find in degrees Fahrenheit

(i) the mean daily temperature in Mexico City.

(ii) the standard deviation of the daily temperature in Mexico City. [3]

. . . . . .

. . . . . .

. . . . . .

. . . . . .

. . . . . .

. . . . . .

. . . . . .

. . . . . .

. . . . . .

. . . . . .

. . . . . .

. . . . . .

9. [Maximum mark: 8]

Kyungyoon investigates the rate at which a cubical block of sugar dissolves in hot coffee. Initially, the cube has side lengths of $10\,\text{mm}$. This information is illustrated in the following diagrams.

diagram not to scale

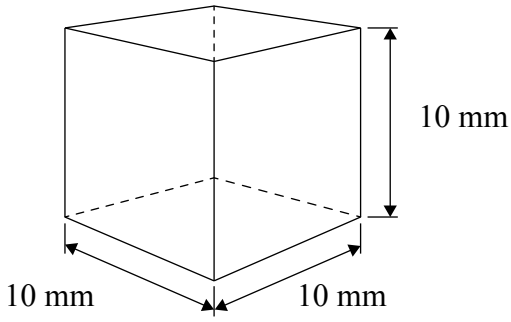

Kyungyoon predicts that, as the block of sugar dissolves, each side length will decrease at a constant rate of $0.2\,\text{mm}$ per second.

(a) According to this model, find

(i) the length of one side of a block of sugar, 20 seconds after it is placed in hot coffee.

(ii) the volume of a block of sugar, 20 seconds after it is placed in hot coffee. [3]

Let the function $V(t)$ represent the volume of the block of sugar, mm^3, t seconds after it is placed in hot coffee. $V(t)$ is given by

$$V(t) = 1000 - 60t + 1.2t^2 - 0.008t^3, \text{ for } 0 \le t \le 50.$$

(b) Find $V'(t)$. [2]

(c) Find the rate of change of the volume of the block of sugar at $t = 20$. [2]

(d) State one reason why the side length of the cube may not always decrease at a constant rate. [1]

(This question continues on the following page)

(Question 9 continued)

. . . . . .

. . . . . .

. . . . . .

. . . . . .

. . . . . .

. . . . . .

. . . . . .

. . . . . .

. . . . . .

. . . . . .

. . . . . .

. . . . . .

10. [Maximum mark: 8]

When studying big cats, researchers use a model in which the mass (m kilograms) of an animal is directly proportional to the cube of its shoulder height (h metres).

Cheetah

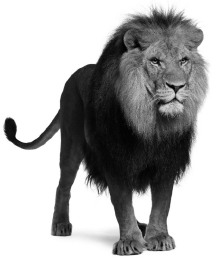

Lion

A cheetah has a mass of $64\,\text{kg}$ and shoulder height of 0.8 metres.

(a) (i) Use the model to find an expression for m in terms of h.

(ii) Hence find the mass of a different cheetah, with a shoulder height of 0.75 metres. [4]

'Rubner's law' states that the energy needs of an animal (E) are directly proportional to the square of h.

The energy needs of a lion of mass $220\,\text{kg}$ are k times the energy needs of a cheetah of mass $64\,\text{kg}$.

(b) Find the value of k. [4]

. . . . . .

. . . . . .

. . . . . .

. . . . . .

. . . . . .

. . . . . .

. . . . . .

. . . . . .

. . . . . .

. . . . . .

. . . . . .

. . . . . .

11. [Maximum mark: 5]

The following diagram shows a semicircle with centre O and diameter PQ. A rectangle $OABC$ is also shown, such that $AB = 8$ and $OA = 5$.

diagram not to scale

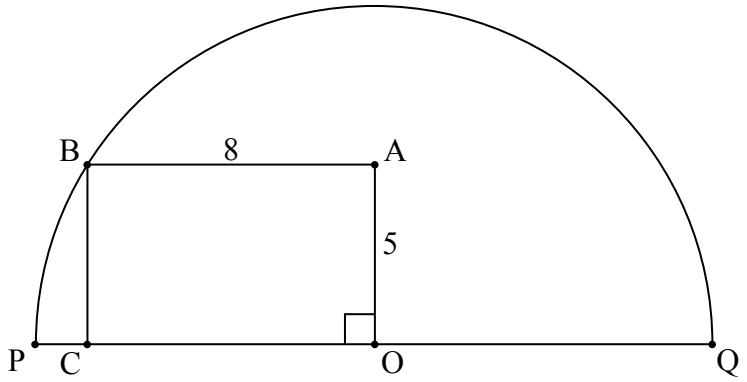

Find the length of the arc BQ.

. . . . . .

. . . . . .

. . . . . .

. . . . . .

. . . . . .

. . . . . .

. . . . . .

. . . . . .

. . . . . .

. . . . . .

. . . . . .

. . . . . .

12. [Maximum mark: 8]

Zac raises funds for a library by running a game where players spin a needle. The final position of the needle results in an outcome where a player wins or loses money. The outcomes, with associated probabilities, are shown in the following diagram.

diagram not to scale

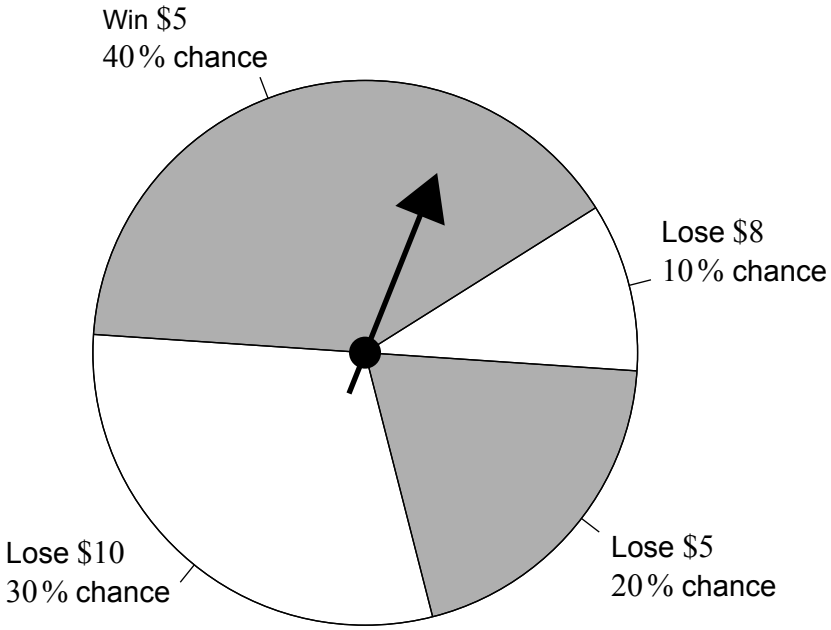

Let X represent the amount that a player of this game wins.

(a) (i) Find the expected value of X.

(ii) Interpret your answer to part (a)(i). [3]

To encourage a person to keep playing this game, Zac increases the winning prize for the second game they play from $\$5$ to $\$6$. For each successive game they play, the winning prize continues to increase by $\$1$.

Emily plays k games. The kth game is fair.

(b) (i) Find the value of k.

(ii) Explain why Zac expects to raise money from the games Emily plays. [5]

(This question continues on the following page)

(Question 12 continued)

Disclaimer:

Content used in IB assessments is taken from authentic, third-party sources. The views expressed within them belong to their individual authors and/or publishers and do not necessarily reflect the views of the IB.

References:

10. Saddako, n.d. *Cheetah (Acinonyx jubatus) Running - stock photo.* [image online] Available at: https://www.gettyimages.co.uk/detail/photo/cheetah-running-royalty-free-image/523244194?phrase=cheetah+speed&adppopup=true [Accessed 2 May 2023]. Source adapted.

GlobalP, n.d. *Lion, Panthera leo, 8 years old, standing - stock photo.* [image online] Available at: https://www.gettyimages.co.uk/detail/photo/lion-panthera-leo-8-years-old-standing-royalty-free-image/134976936?phrase=Lion+standing&adppopup=true [Accessed 2 May 2023]. Source adapted.

All other texts, graphics and illustrations © International Baccalaureate Organization 2024